US 20260356533A1

(19) **United States**

(12) **Patent Application Publication** (10) **Pub. No.: US 2026/0356533 A1**

Cobo (43) **Pub. Date: Nov. 12, 2026**

(54) **PORTABLE FOOD CONTAINER**

(71) Applicant: **Marcelo Alonso Mejia Cobo**, Seattle, WA (US)

(72) Inventor: **Marcelo Alonso Mejia Cobo**, Seattle, WA (US)

(21) Appl. No.: **19/203,817**

(22) Filed: **May 9, 2025**

Publication Classification

(51) **Int. Cl.**

B65D 5/10	(2006.01)
B65D 5/02	(2006.01)
B65D 5/54	(2006.01)

(52) **U.S. Cl.**

CPC ***B65D 5/106*** (2013.01); ***B65D 5/0227*** (2013.01); ***B65D 5/5445*** (2013.01)

(57) **ABSTRACT**

A food container may include a body, the body having a flat configuration and a folded configuration, wherein the body includes: a hinge located in a hinge portion of the body and configured to allow the body to preferentially fold along the hinge, a first set of side closure mechanisms in the hinge portion configured to connect with one another when the body is in the folded configuration; and a set of tearable perforations wherein at least one tearable perforation of the set of tearable perforations allows a removable portion of the body to be at least partially removed from the hinge portion.

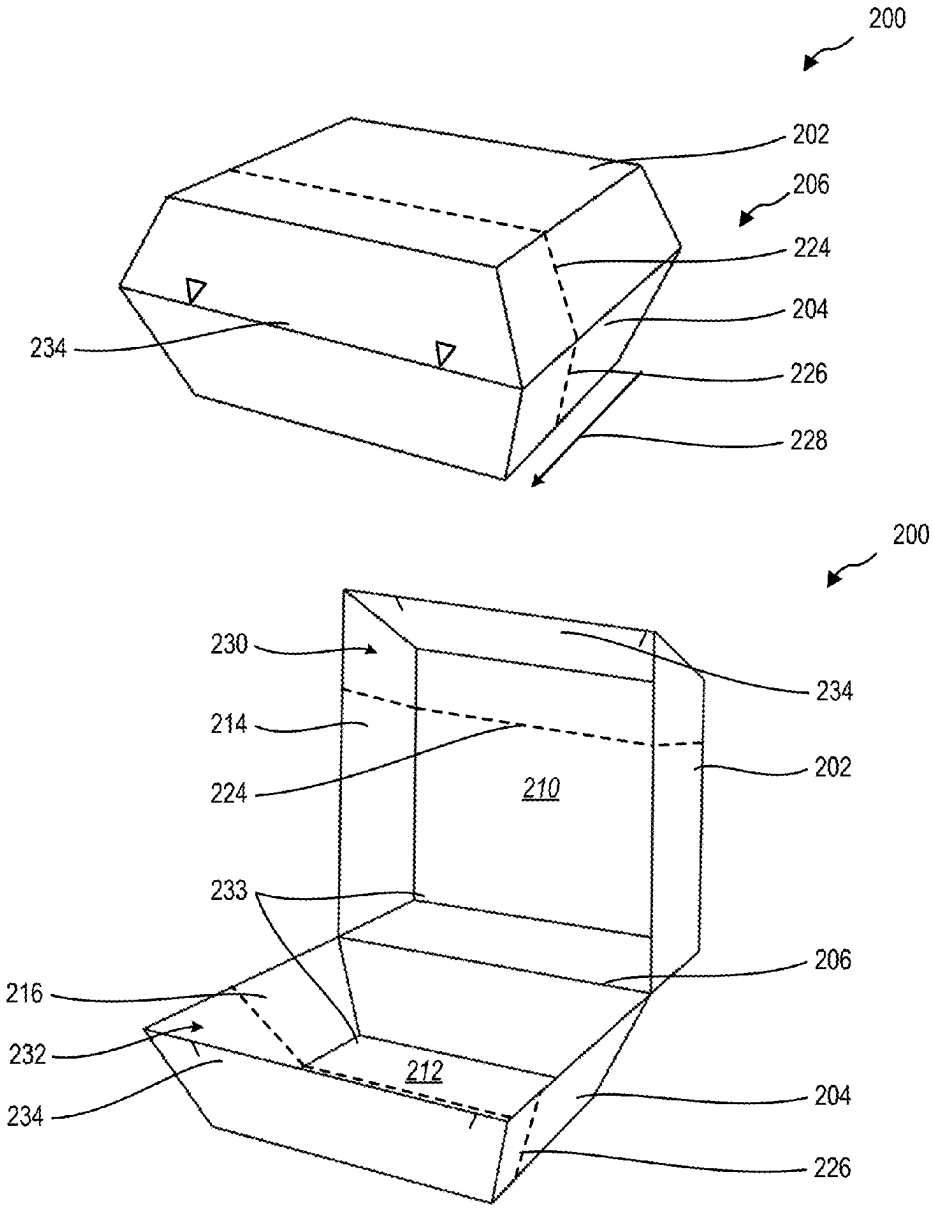

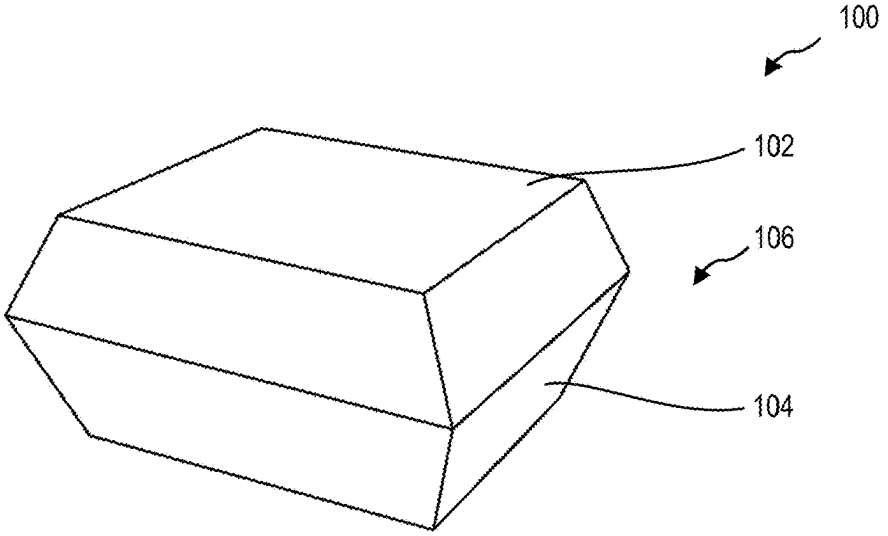

FIG. 1-1

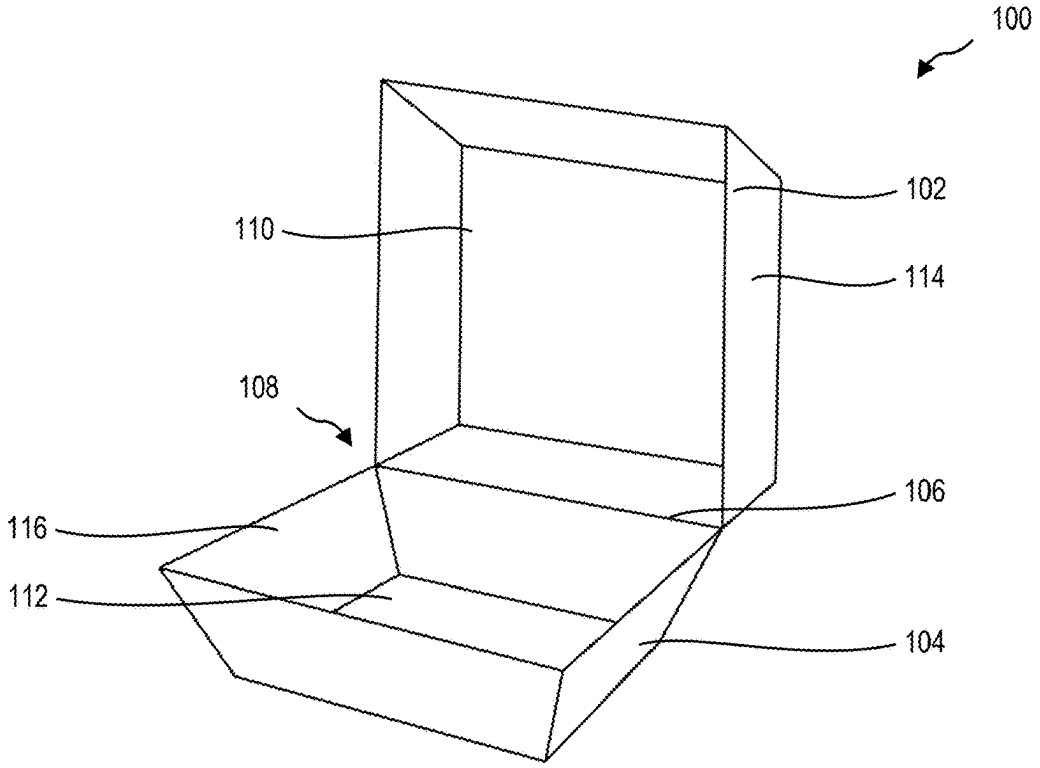

FIG. 1-2

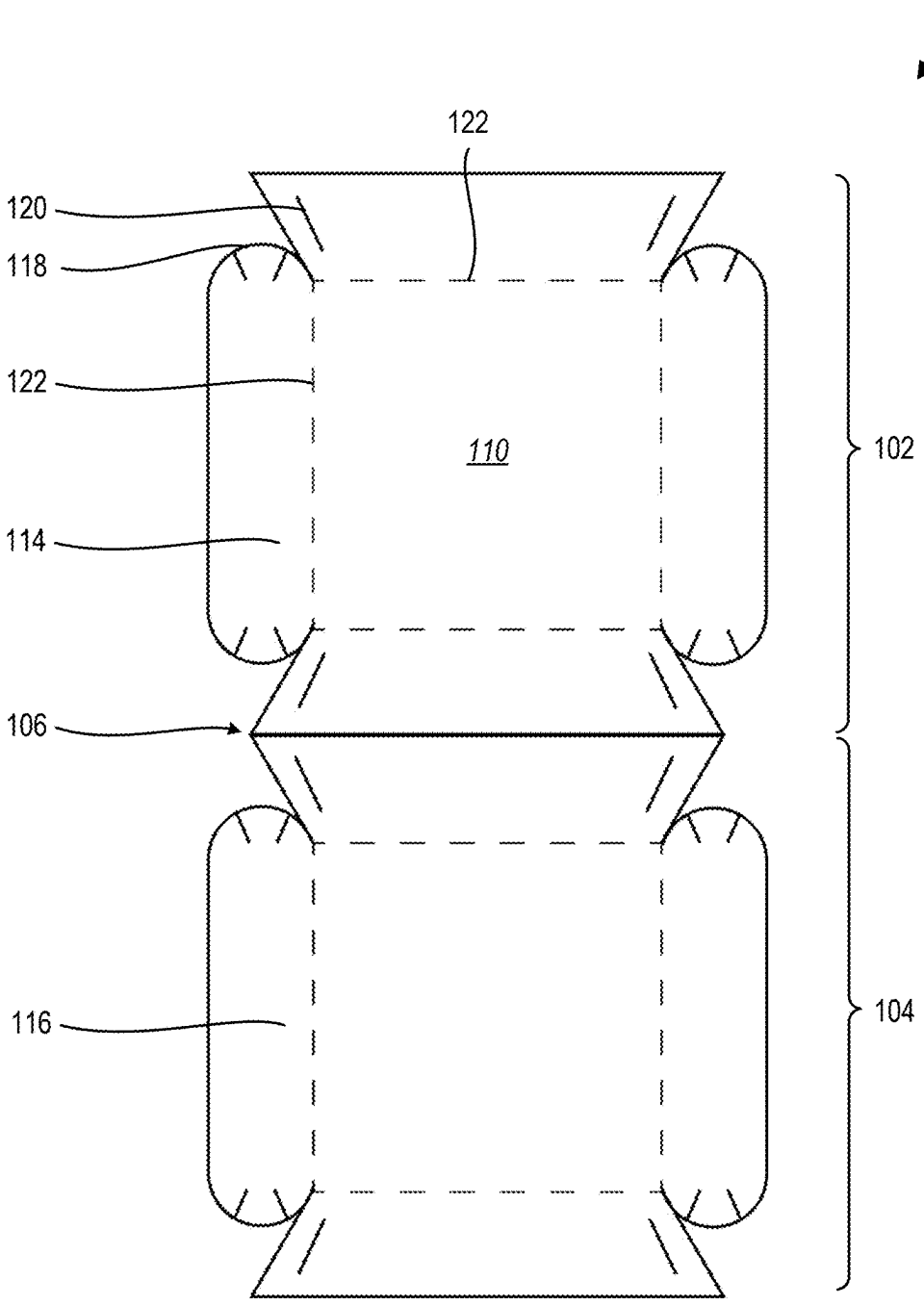

FIG. 1-3

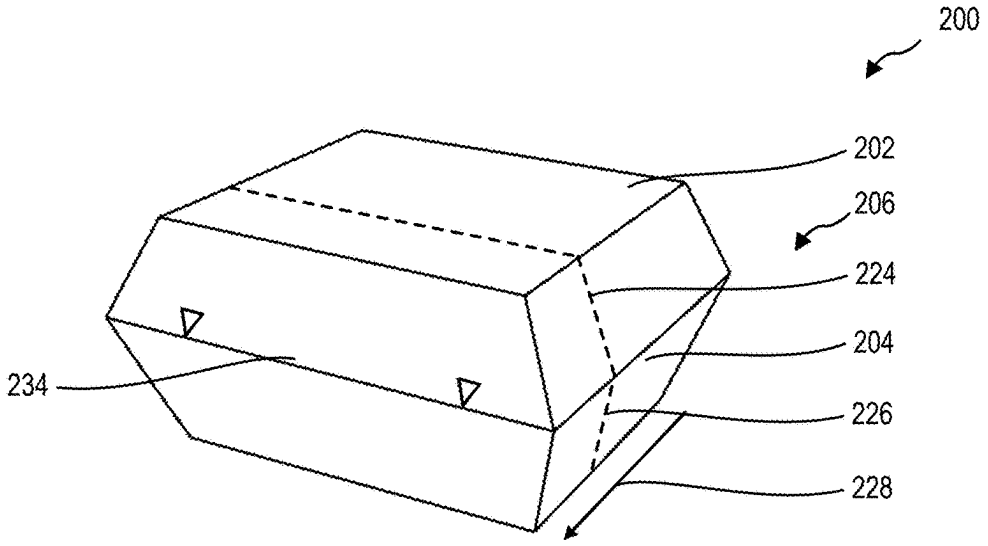
200
202
206
224
204
234
226
228

FIG. 2-1

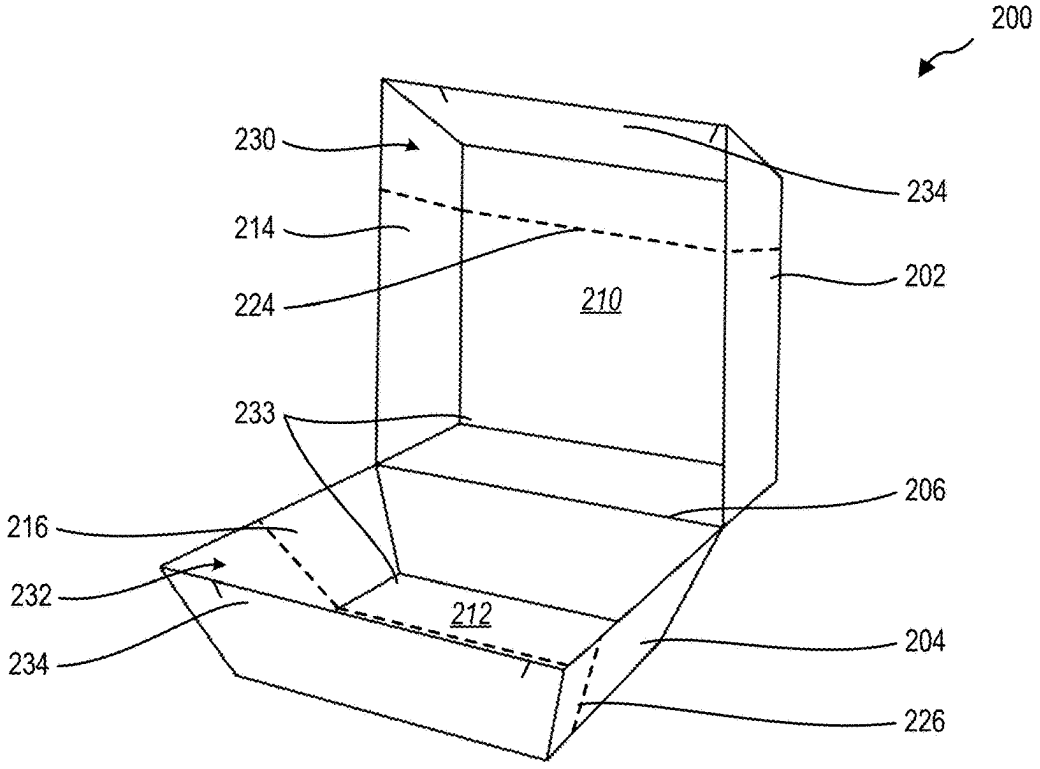
200
230
234
214
202
224
210
233
206
216
232
212
204
234
226

FIG. 2-2

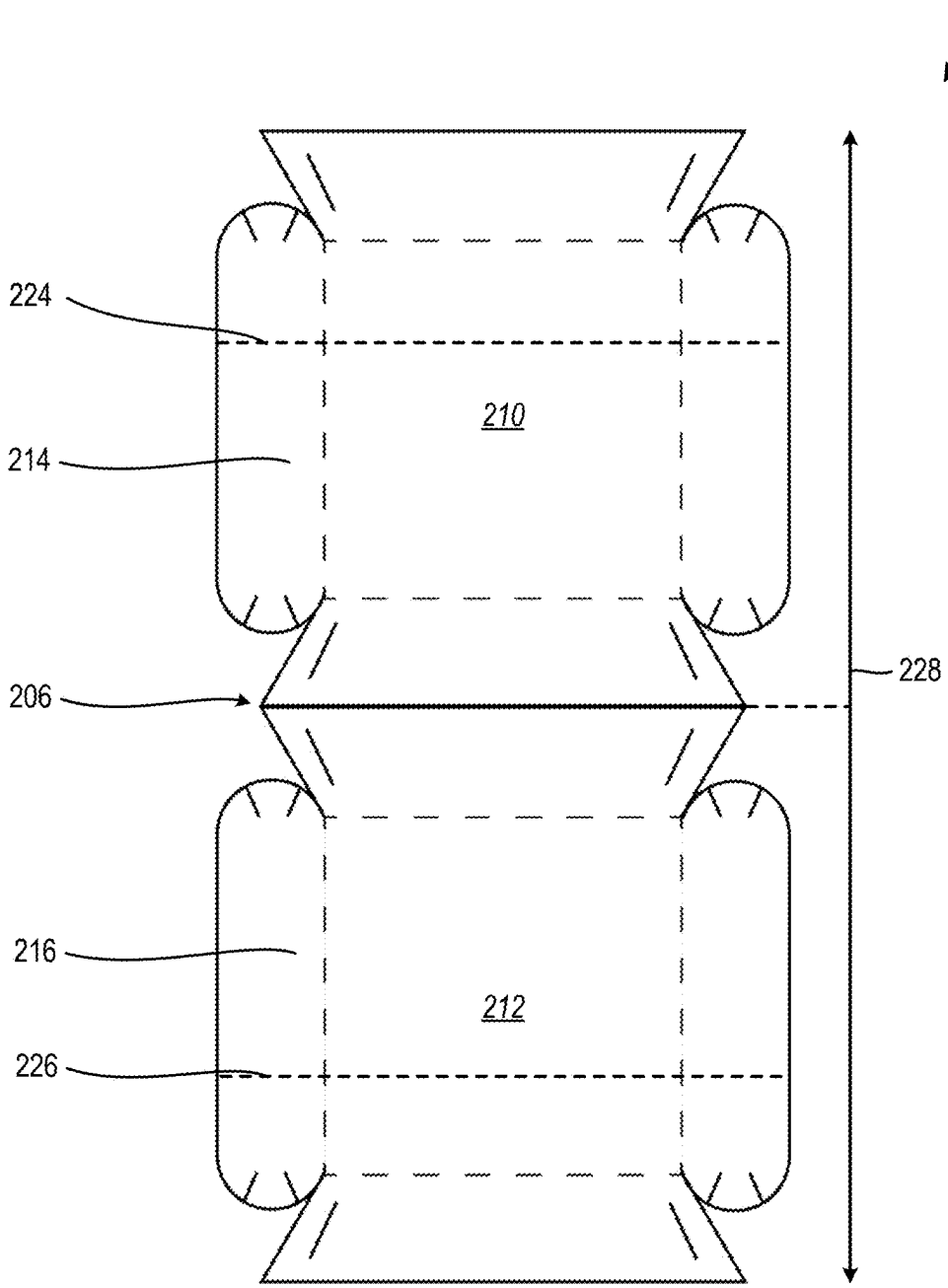

FIG. 2-3

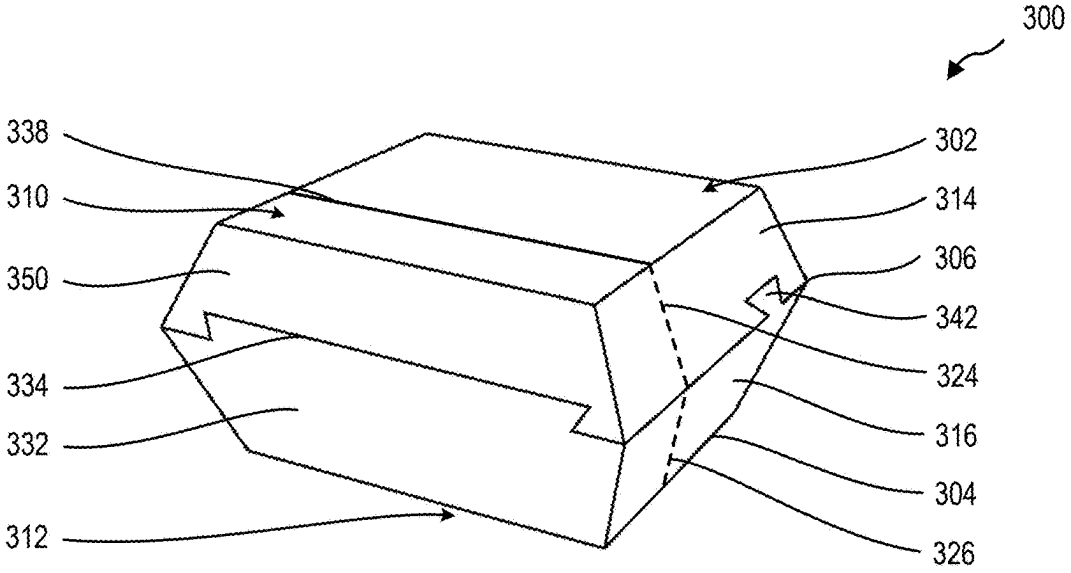
300
338
310
350
334
332
312
302
314
306
342
324
316
304
326

FIG. 3-1

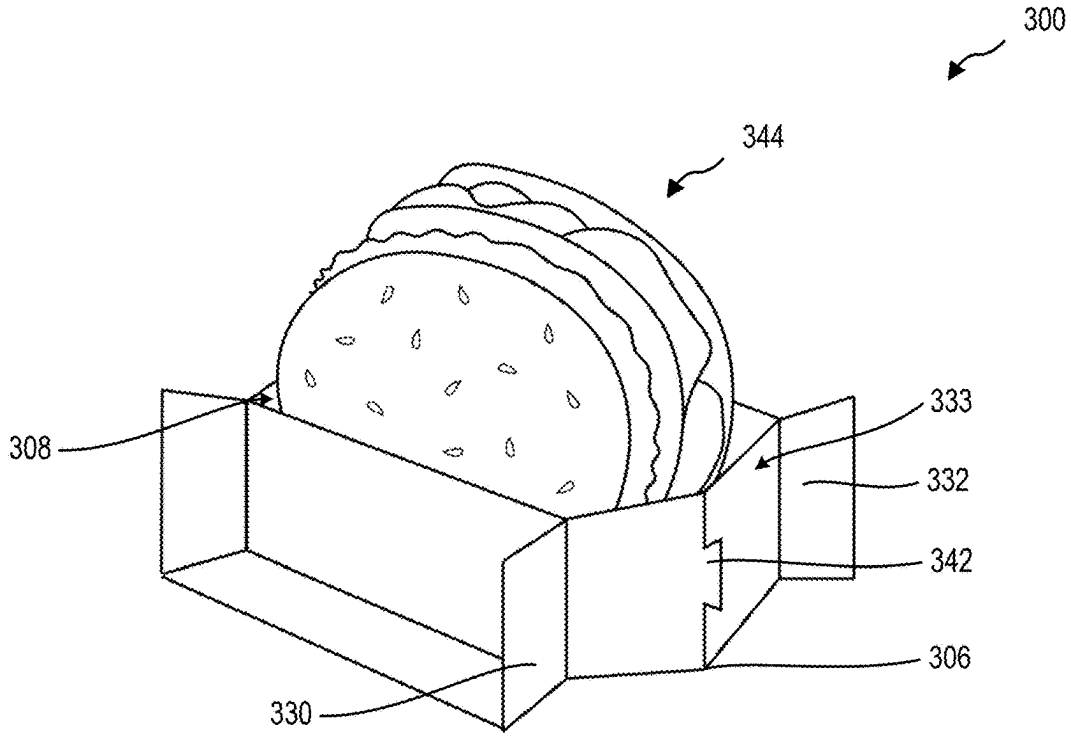
300
344
308
333
332
342
306
330

FIG. 3-2

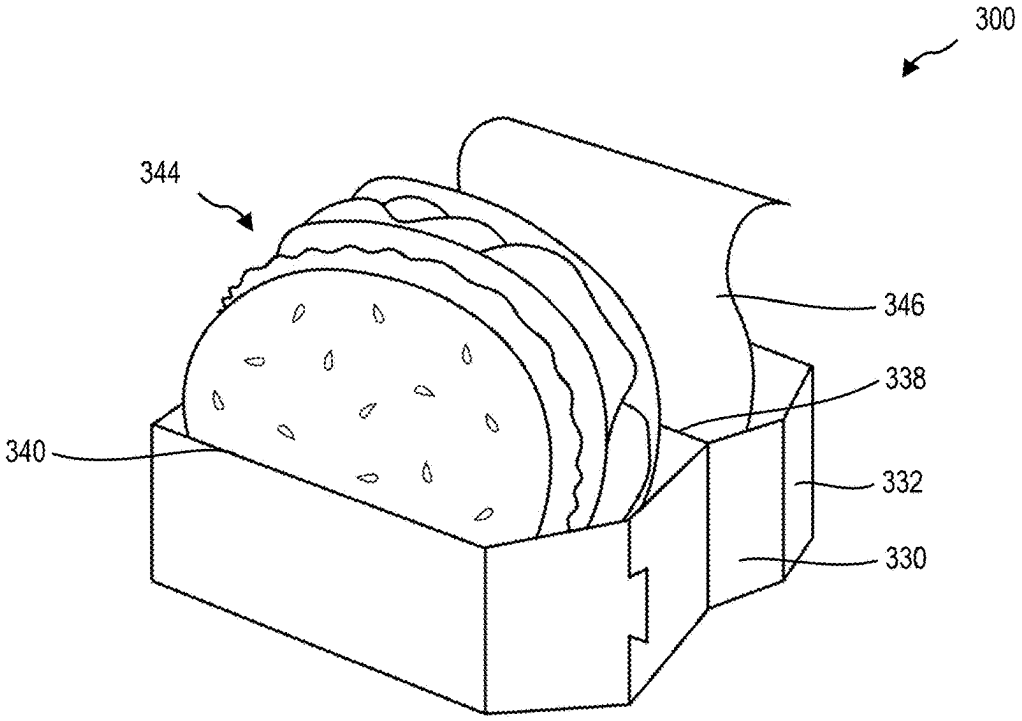

FIG. 3-3

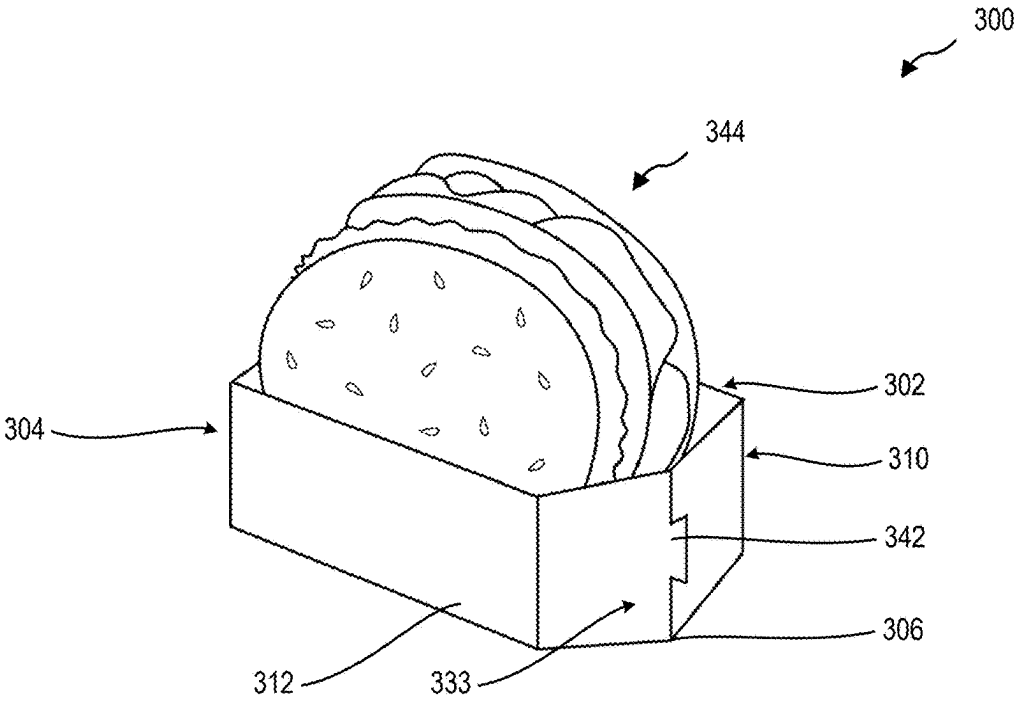

FIG. 3-4

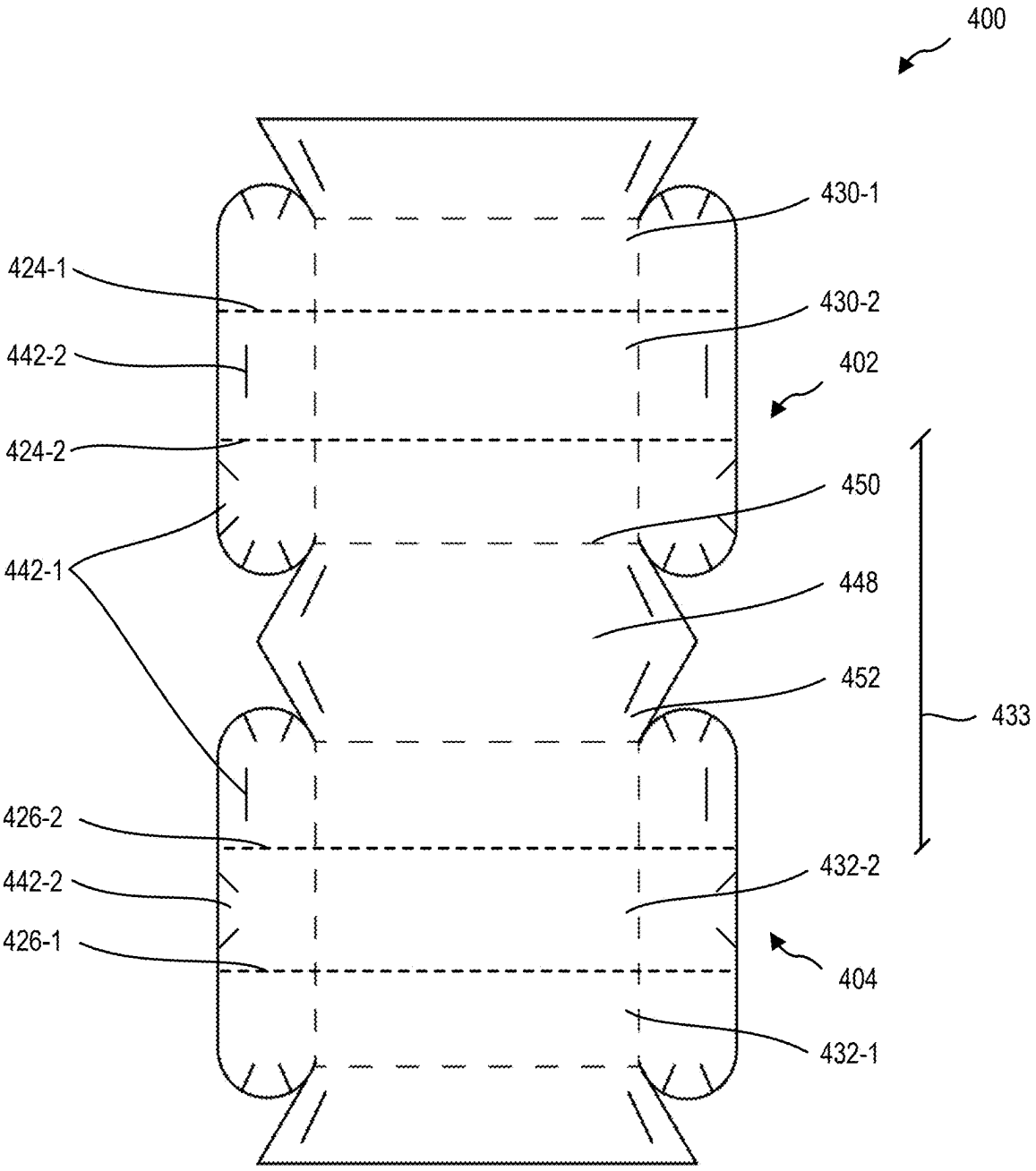
400
430-1
424-1
430-2
442-2
402
424-2
450
442-1
448
452
433
426-2
442-2
432-2
426-1
404
432-1

FIG. 4-1

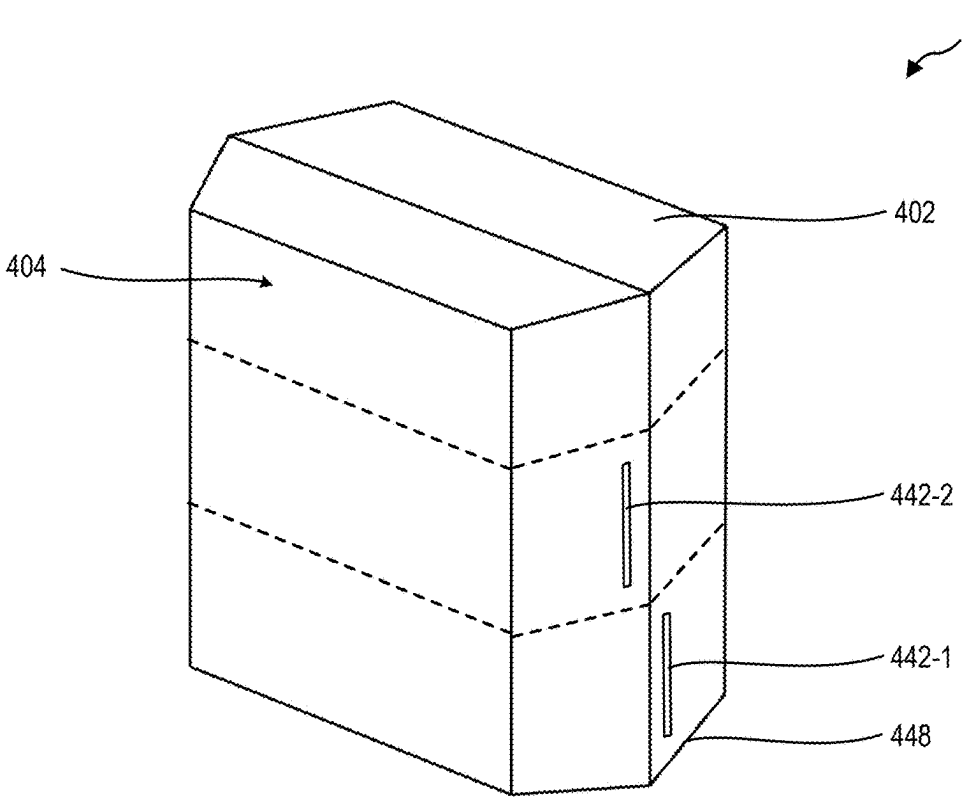
400
402
404
442-2
442-1
448

FIG. 4-2

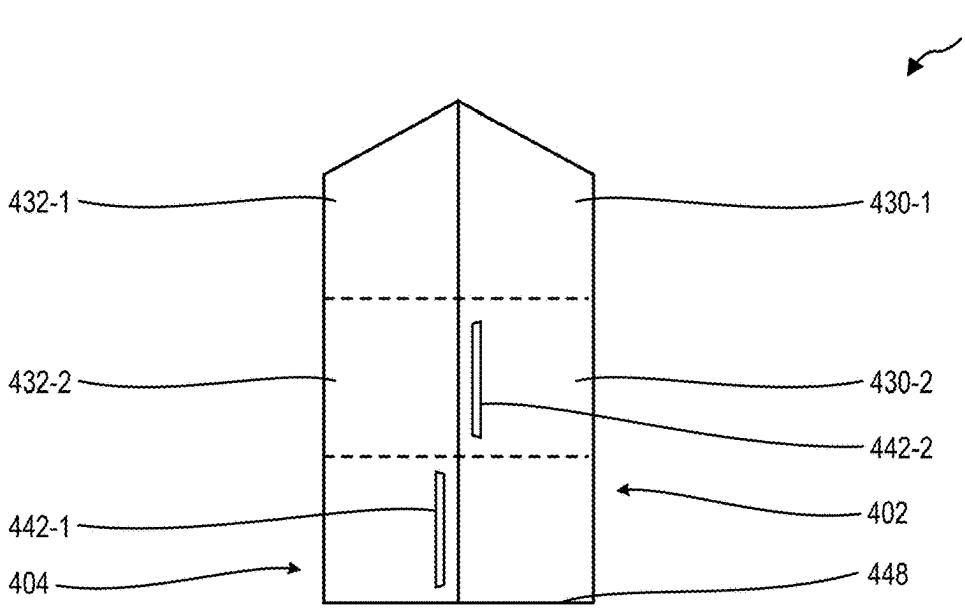
400
432-1
430-1
432-2
430-2
442-2
442-1
402
404
448

FIG. 4-3

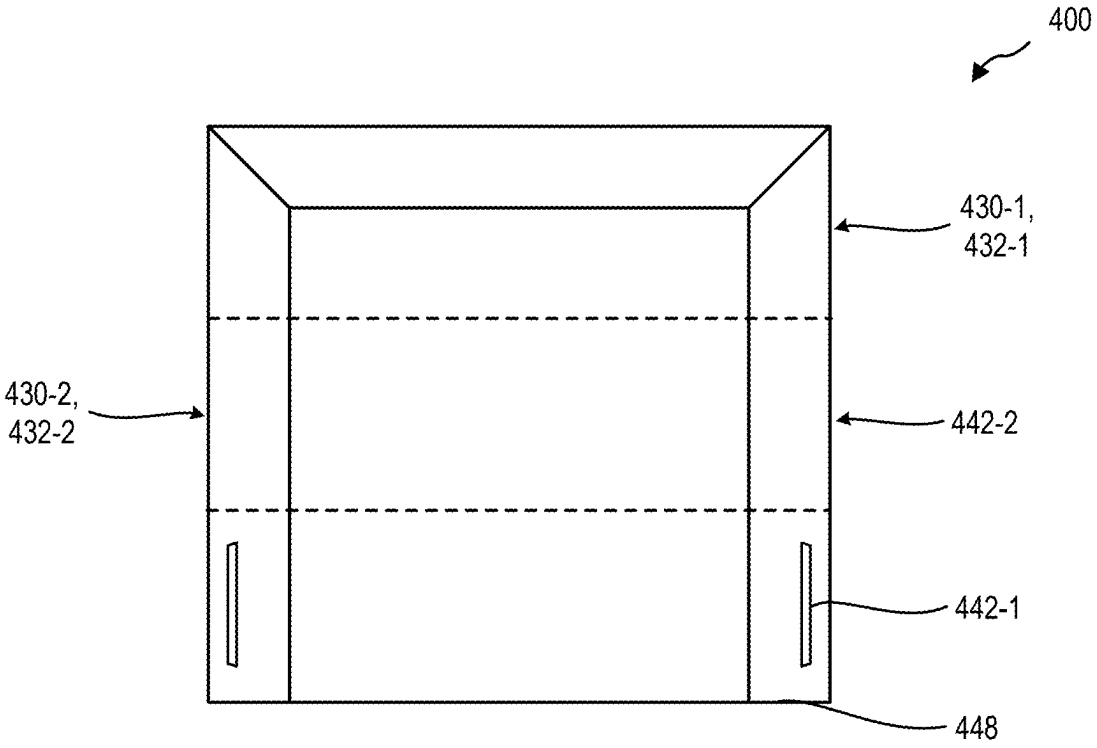

FIG. 4-4

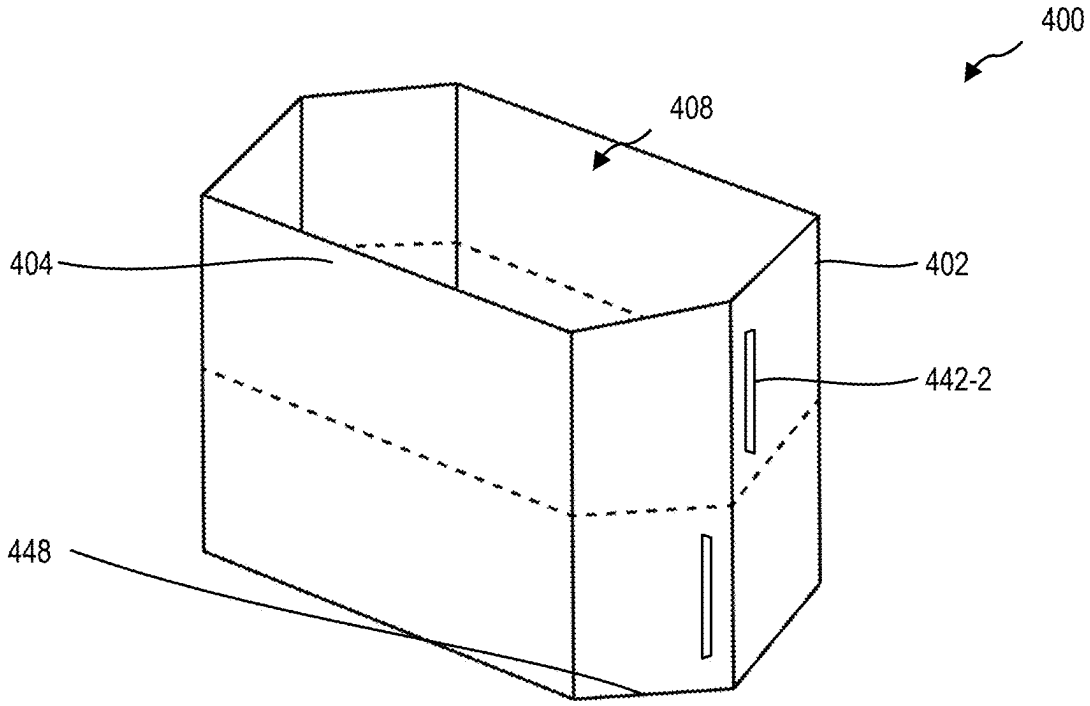

FIG. 4-5

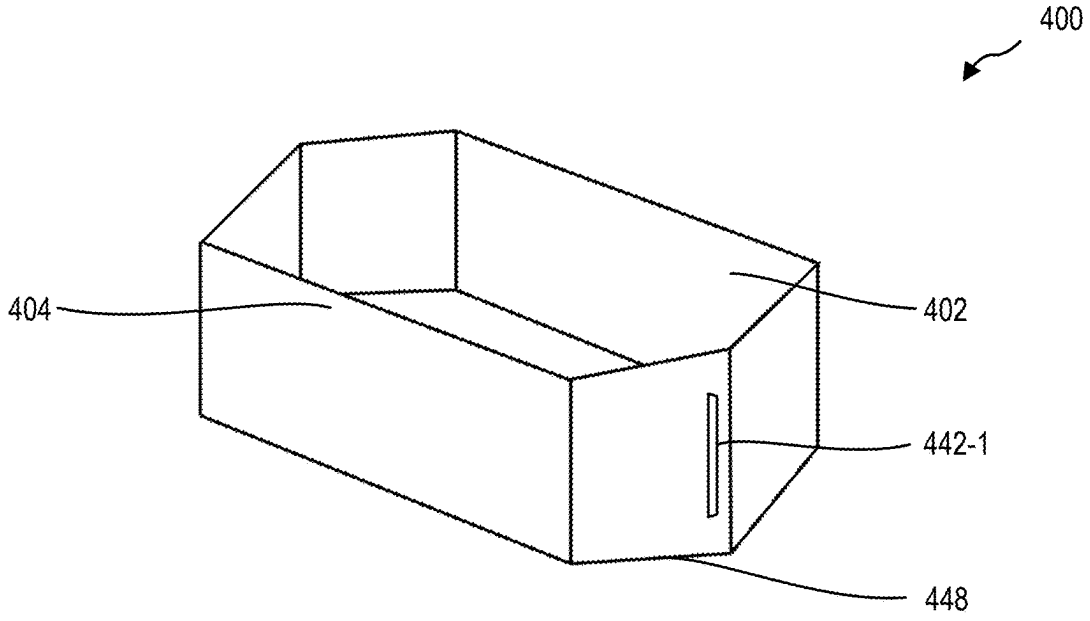

FIG. 4-6

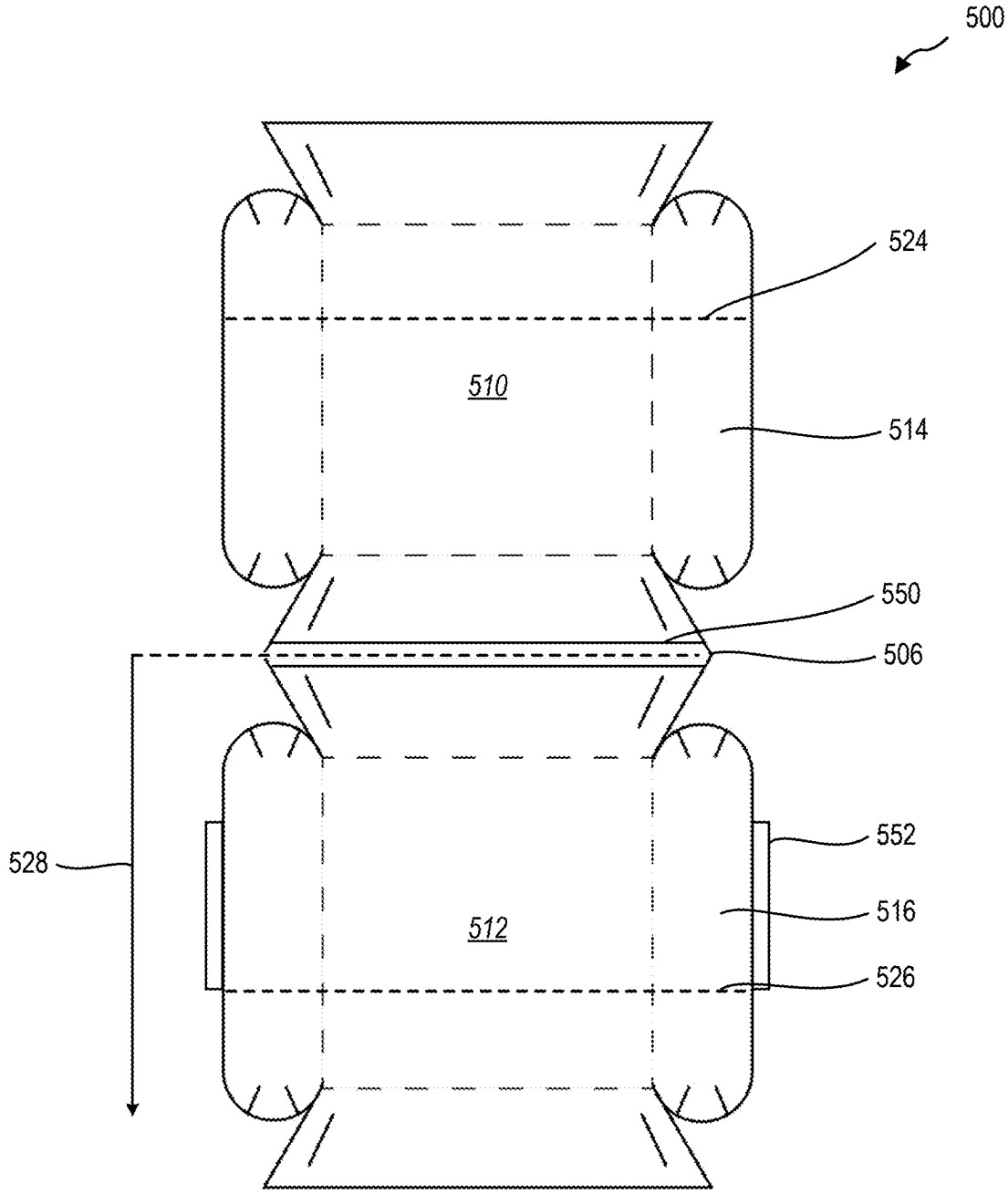

FIG. 5-1

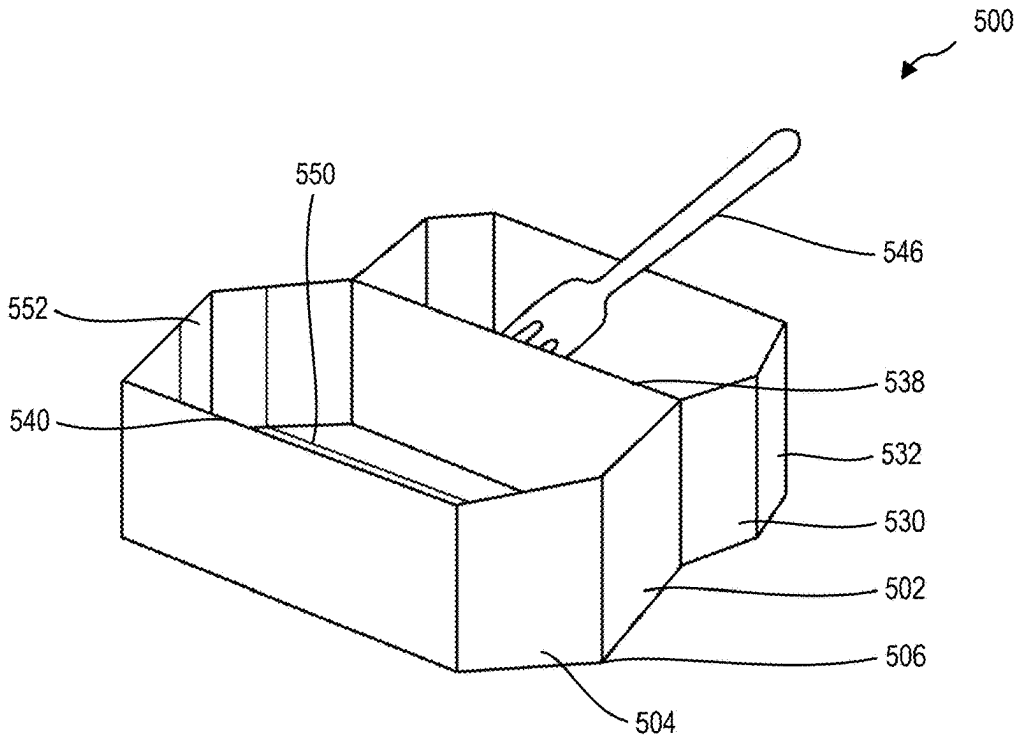
500
550
546
552
538
540
532
530
502
506
504

FIG. 5-2

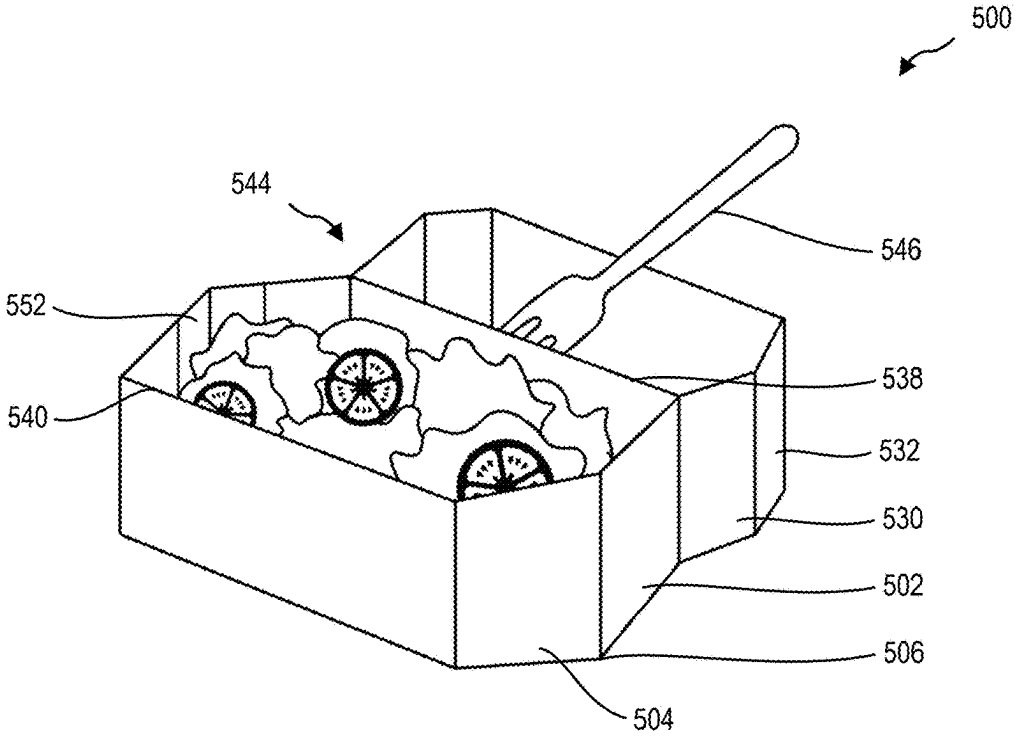
500
544
546
552
538
540
532
530
502
506
504

FIG. 5-3

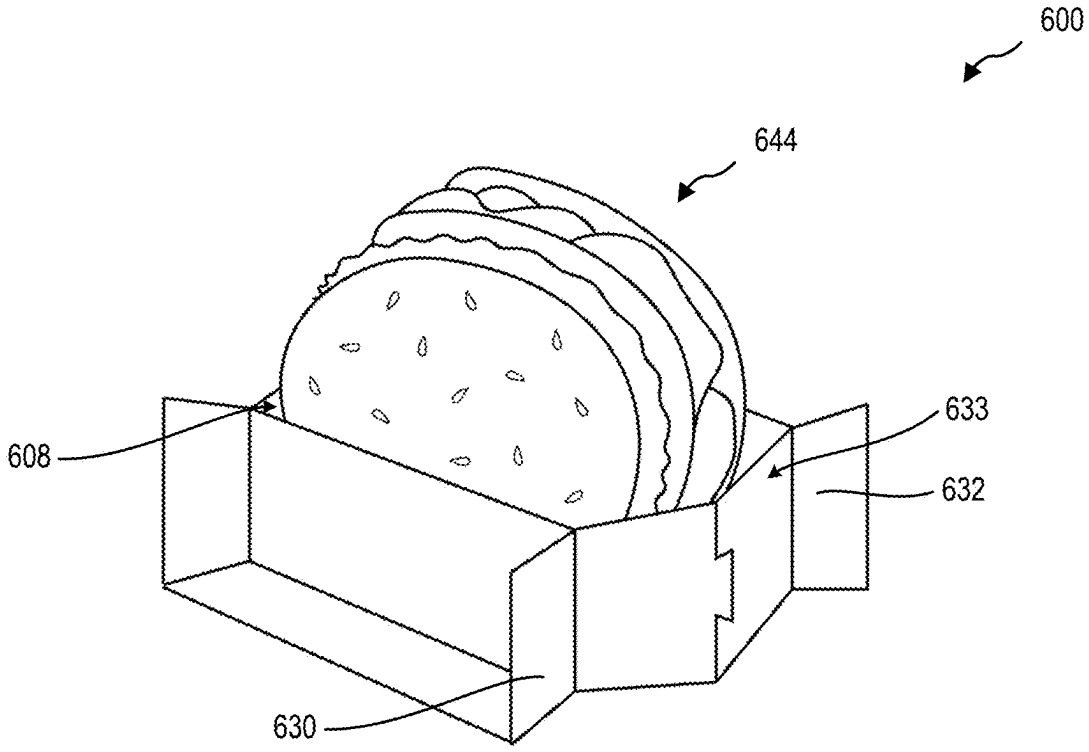

FIG. 6-1

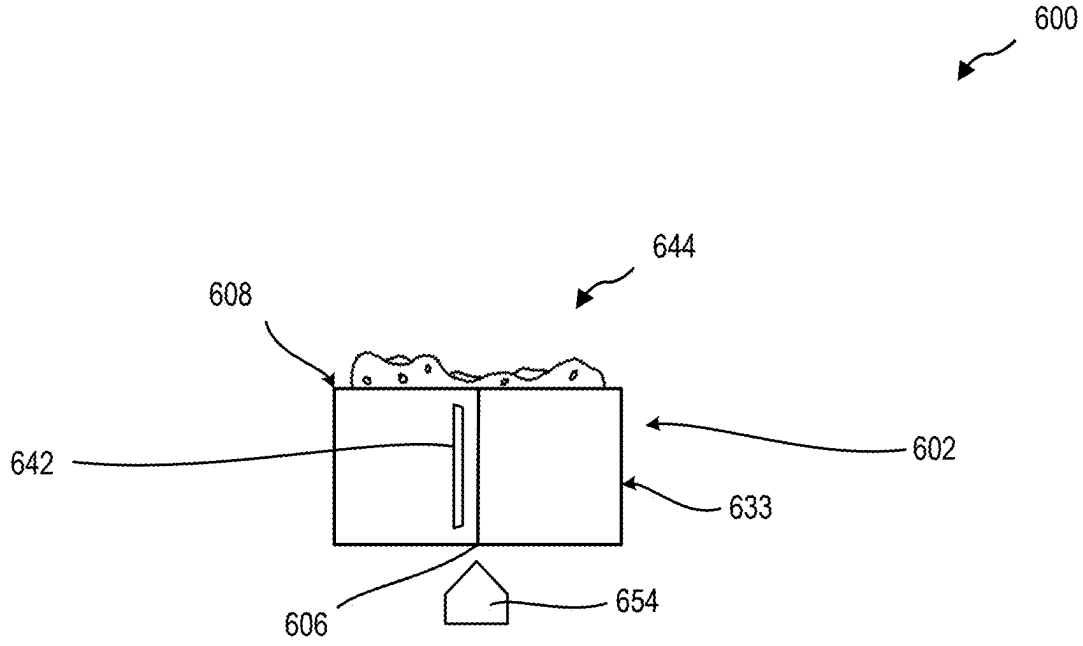

FIG. 6-2

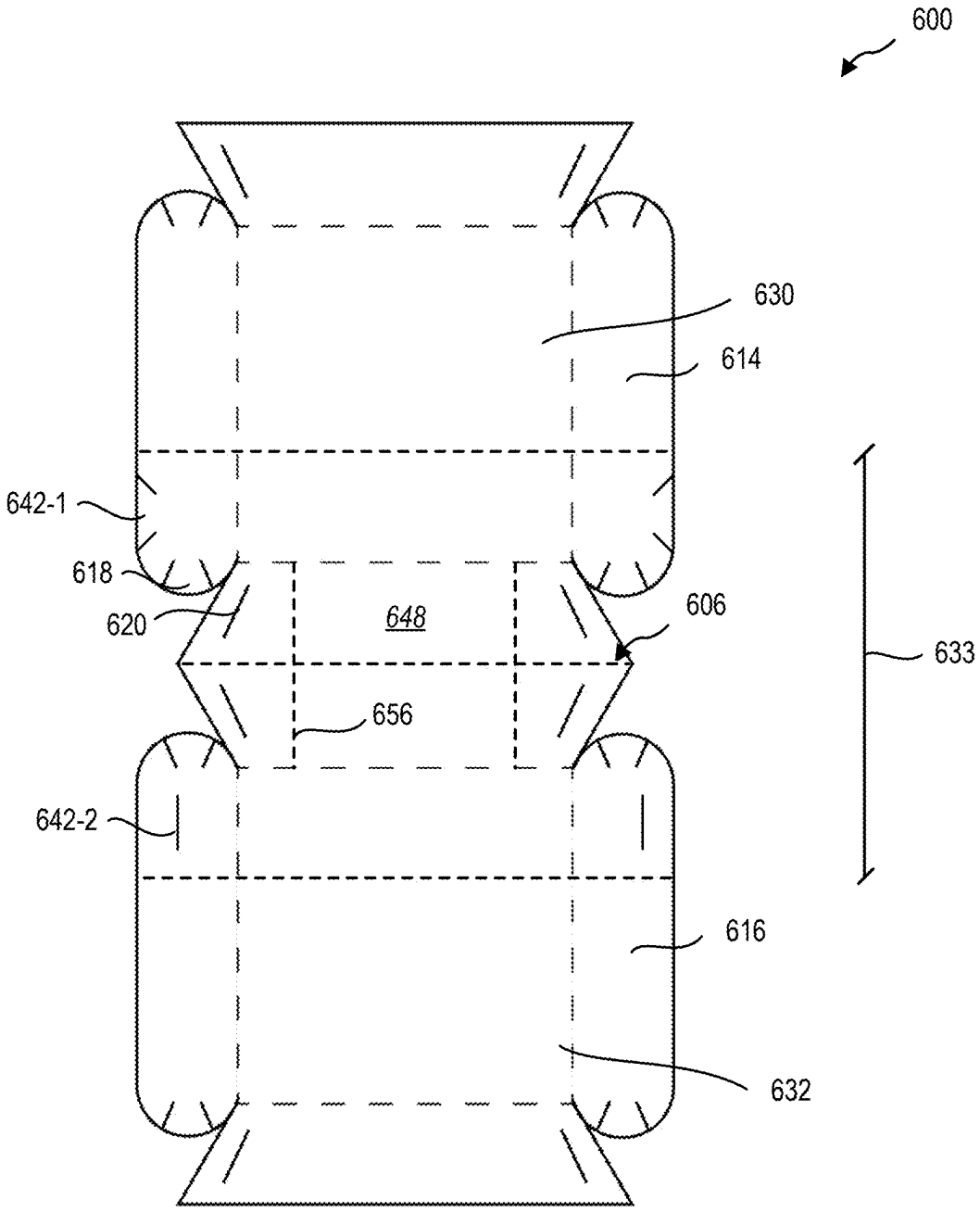

FIG. 6-3

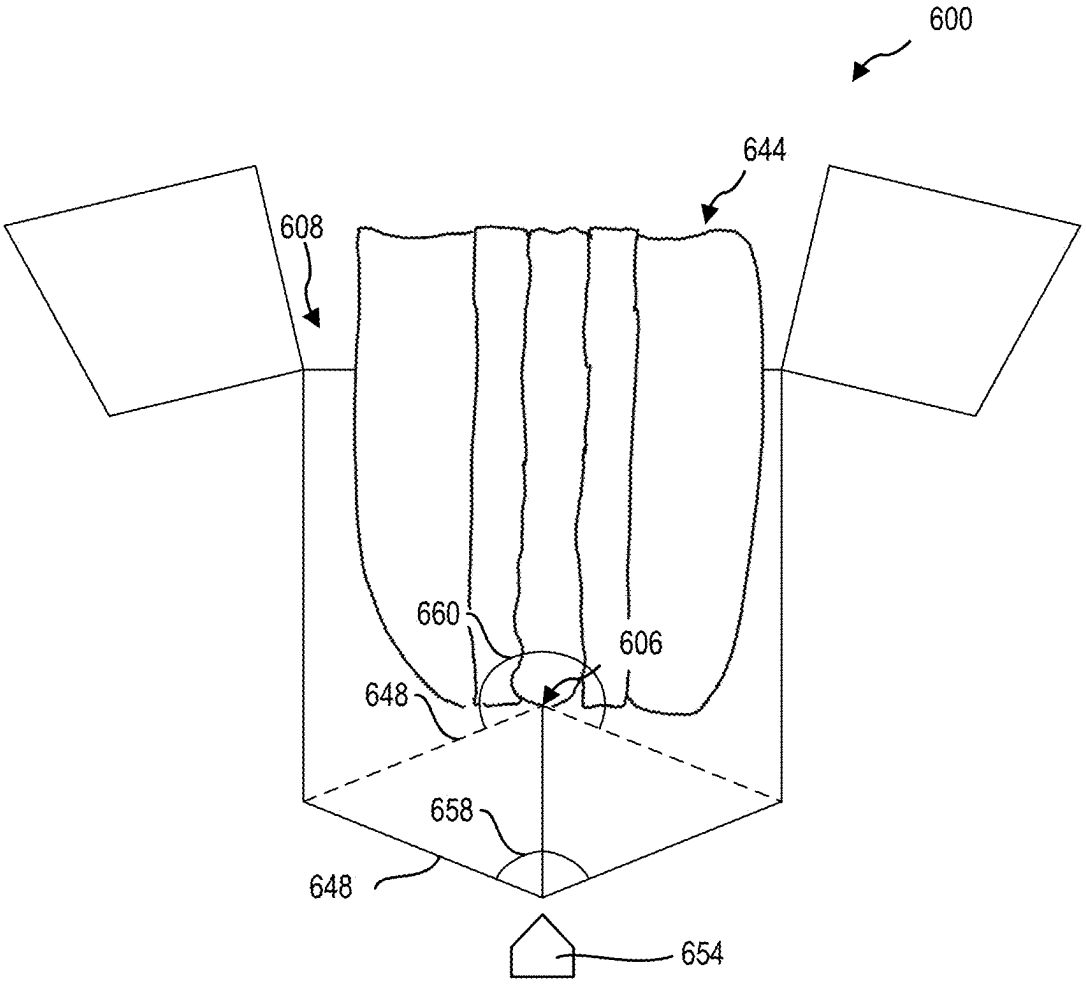

FIG. 6-4

PORTABLE FOOD CONTAINER

BACKGROUND

Background and Relevant Art

[0001] Portable food, such as that provided by fast food, street carts, food trucks, and other sources can be convenient for consumers but cause litter, mess, and other negative externalities for the people and environment around the user and the source. Conventionally, the food is provided in a container or wrapper that is removed and discarded before consumption. Removing and discarding the container can, itself, cause the food to shed particles or sauces. Further, the consumer can then dirty his or her hands while consuming the food after discarding the container.

[0002] The subject matter claimed herein is not limited to embodiments that solve any disadvantages or that operate only in environments such as those described above. Rather, this background is only provided to illustrate one exemplary technology area where some embodiments described herein may be practiced.

BRIEF SUMMARY

[0003] In some aspects, the techniques described herein relate to a food container including: a body, the body having a flat configuration and a folded configuration, wherein the body includes: a hinge located in a hinge portion of the body and configured to allow the body to preferentially fold along the hinge, a first set of side closure mechanisms in the hinge portion configured to connect with one another when the body is in the folded configuration; and a set of tearable perforations wherein at least one tearable perforation of the set of tearable perforations allows a removable portion of the body to be at least partially removed from the hinge portion.

[0004] In some aspects, the techniques described herein relate to a food container including: a body, the body having a flat configuration and a folded configuration, wherein the body includes: a hinge located in a hinge portion of the body and configured to allow the body to preferentially fold along the hinge, a first set of closure mechanisms in the hinge portion configured to connect with one another when the body is in the folded configuration; a second set of closure mechanisms in a removable portion, wherein a first side of the body and a second side of the body are opposite one another across the hinge; and a first set of tearable perforations wherein at least one tearable perforation of the first set of tearable perforations allow the removable portion of the body to be at least partially removed from the hinge portion.

[0005] In some aspects, the techniques described herein relate to a food container including: a body, the body having a flat configuration and a folded configuration, wherein the body includes: a hinge located in a hinge portion of the body and configured to allow the body to preferentially fold along the hinge, a first set of side closure mechanisms in the hinge portion configured to connect with one another when the body is in the folded configuration; a set of tearable perforations wherein at least one tearable perforation of the set of tearable perforations allow a removable portion of the body to be at least partially removed from the hinge portion; and a sealing element located on at least one sidewall of the body.

[0006] Additional features and advantages will be set forth in the description which follows, and in part will be obvious from the description, or may be learned by the practice of the teachings herein. Features and advantages of the disclosure may be realized and obtained by means of the instruments and combinations particularly pointed out in the appended claims. Features of the present disclosure will become more fully apparent from the following description and appended claims or may be learned by the practice of the disclosure as set forth hereinafter.

BRIEF DESCRIPTION OF THE DRAWINGS

[0007] In order to describe the manner in which the above-recited and other features of the disclosure can be obtained, a more particular description will be rendered by reference to specific embodiments thereof which are illustrated in the appended drawings. For better understanding, the like elements have been designated by like reference numbers throughout the various accompanying figures. While some of the drawings may be schematic or exaggerated representations of concepts, at least some of the drawings may be drawn to scale. Understanding that the drawings depict some example embodiments, the embodiments will be described and explained with additional specificity and detail through the use of the accompanying drawings in which:

[0008] FIG. **1-1** is a perspective view of a food container in a folded configuration.

[0009] FIG. **1-2** is a perspective view of the food container of FIG. **1-1** in an open folded configuration.

[0010] FIG. **1-3** is a plan view of the food container of FIG. **1-1** in a flat configuration.

[0011] FIG. **2-1** through **2-3** illustrate an embodiment of a food container **200** according to the present disclosure that allows for simpler and more sanitary consumption of a food item stored therein than a conventional clamshell food container, according to at least some embodiments or the present disclosure.

[0012] FIG. **3-1** through **3-4** illustrate an embodiment of a food container providing access to a food item stored therein to eat the food item directly from the food container, according to at least some embodiments or the present disclosure.

[0013] FIG. **4-1** through **4-6** illustrate an embodiment of a food container with a plurality of sets of perforations and a flat hinge portion, according to at least some embodiments or the present disclosure.

[0014] FIG. **5-1** through **5-3** illustrate an embodiment of a food container with a plurality of sealing elements configured to limit liquid food waste from exiting the food container, according to at least some embodiments or the present disclosure.

[0015] FIG. **6-1** through **6-4** illustrate an embodiment of a food container with a movable hinge portion to urge a food item upward in the interior volume, according to at least some embodiments or the present disclosure.

DETAILED DESCRIPTION

[0016] This disclosure generally relates to portable food containers. More particularly, the present disclosure relates the use of a food container that reduces both container waste and food waste being dropped or left behind. In some embodiments, a food container according to the present disclosure allows a provider of food to safely encapsulate a food item in the container and a consumer of the food to eat

the food item without needing to remove the food item from the container. In some embodiments, at least a portion of the food container is removable to allow the consumer to access and eat the food item directly from the food container, limiting the food waste that falls from the food container and/or limiting the additional plates, bowls, napkins, trays, or other ancillary items that may be dirtied and require cleaning or may be thrown in the trash after eating the food item.

[0017] Conventional food containers, such as a clamshell container, allow a provider of a food item to place the food item in the container and close a lid of the food container to enclose the food item. However, a consumer of the food item, such as a sandwich, must then lift the food item from the clamshell container, which results in food waste, such as sandwich ingredients, condiments, sauces, crumbs, etc. falling from the food item onto a table, the ground, or the consumer themselves. In some embodiments, a food container according to the present disclosure allows a provider to place the food item in the container in a familiar manner, while also allowing the consumer to eat the food item directly from the food container. Eating directly from the container may reduce container waste, allow the consumer to eat the food with only one hand (simplifying eating for the user), and reduce the food waste requiring subsequent cleaning.

[0018] FIG. **1-1** through **1-3** illustrate an example of a conventional clamshell food container **100**. FIG. **1-1** is a perspective view of the food container **100** in a closed folded configuration. The food container **100** includes a first side **102** and a second side **104** coupled by a hinge **106**. The hinge **106** allows rotation of the first side **102** relative to the second side **104** to open and close the food container **100**.

[0019] FIG. **1-2** is a perspective view of the food container **100** in an open folded configuration. In the open folded configuration, the first side **102** and second side **104** are moved relative to one another around the hinge **106** to provide access to an interior volume **108** of the food container **100**. The folded configuration provides a first surface **110** of the first side **102** and a second surface **112** of the second side **104**. In some embodiments, a food item is placed on the second surface **112** and the first side **102** of the food container **100** is closed relative to the second side **104** to enclose the food item. In some embodiments, the first surface **110** is available as an additional surface for placing food items when the food container **100** is an open folded configuration.

[0020] The first side **102** includes a plurality of first sidewalls **114** that support the first surface **110** and the second side **104** includes a plurality of second sidewalls **116** that support the second surface **112**. In some embodiments, the first sidewalls **114** and second sidewalls **116** support the first surface **110** and second surface **112** of the food container **100** apart from one another. For example, a height of the food container **100** may be the distance of the first surface **110** and second surface **112** from one another. The height of the food container **100** and the angle of the first sidewalls **114** and second sidewalls **116** relative to the first surface **110** and second surface **112**, respectively, define the interior volume **108**.

[0021] In a conventional food container **100**, the food item is housed in the interior volume **108** of the food container **100** until the food container **100** is opened, at which point the food item is removed from the food container **100** to be consumed. Removing the food item from the food container **100**, however, can result in food waste falling from the food item and/or food waste being transferred to the user.

[0022] FIG. **1-3** is a plan view of the food container **100** in a flat (i.e., unfolded) configuration. The flat configuration of the food container **100** allows the food container **100** to occupy little volume during transportation or storage prior to being assembled into the folded configuration illustrated in FIG. **1-1** and FIG. **1-2**. In some embodiments, the food container **100** includes a plurality of interlocking features that allow a first portion of the food container **100** to couple to a second portion of the food container **100** to retain the folded configuration. For example, the first sidewalls **114** and/or second sidewalls **116** of the food container **100** may include a first interlocking feature, such as a tab **118**, and a complementary second interlocking feature, such as a slot **120**.

[0023] In the illustrated embodiment in FIG. **1-3**, the first side **102** includes a plurality of first sidewalls **114** that are each connected to the first surface **110** at a foldable crease **112**. The foldable creases **122** allow the first sidewalls **114** to folded toward one another and couple at the interlocking features (e.g., the tab **118** and slot **120**) located at the ends of each first sidewall **114**. The second sidewalls **116** includes similar interlocking features allowing the second sidewalls **116** to fold and couple together, providing and retaining the folded configuration with an interior volume **108** described in relation to FIG. **1-1** and FIG. **1-2**. As described herein, the interior volume **108** can contain a food item and allow a user to remove and consume the food item.

[0024] FIG. **2-1** through **2-3** illustrate an embodiment of a food container **200** according to the present disclosure that allows for simpler and more sanitary consumption of a food item stored therein than a conventional clamshell food container such as described in relation to FIG. **1-1** through **1-3**. FIG. **2-1** is a perspective view of the food container **200** in a closed folded configuration. In some embodiments, the food container **200** includes a first side **202** and a second side **204** coupled by a hinge **206**. The hinge **206** allows rotation of the first side **202** relative to the second side **204** around the hinge **206** to open and close the food container **200**.

[0025] Additionally, the first side **202** and second side **204** include a first tearable perforation **224** and a second tearable perforation **226**, respectively. The first tearable perforation **224** and second tearable perforation **226** are longitudinally aligned (e.g., in a longitudinal direction **228** away from the hinge **206**) to form a substantially continuous tearable perforation around the food container **200**. For example, the longitudinally distal portions of the first side **202** and the second side **204** of the food container **200** away from the hinge **206** may be removed at the first tearable perforation **224** and the second tearable perforation **226** to allow that user to access the food item stored therein. In other examples, the first tearable perforation **224** and the second tearable perforation **226** may be longitudinally misaligned to allow one of the first side **202** or the second side **204** to be longitudinally longer than the other when the removable portion of the food container is removed at the first tearable perforation **224** and the second tearable perforation **226**.

[0026] FIG. **2-2** is a perspective view of the food container **200** in an open folded configuration. In some embodiments, the first tearable perforation **224** is positioned in the first surface **210** and first sidewalls **214** of the first side **202**, and the second tearable perforation **226** is positioned in the

second surface **212** and second sidewalls **216** of the second side **204**. The first removable section **230** and the second removable section **232** are independently removable at the first tearable perforation **224** and the second tearable perforation **226**, respectively, while a hinge portion **233** of the body of the food container **200** remains connected via the hinge **206**. In some embodiments, the food container **200** includes an end closure mechanism **234** (such as interlocking tabs, slots, or other features) that retains the food container **200** in a closed configuration and retains the first removable section **230** and the second removable section **232** relative to one another. Such end closure mechanism **234** (also shown in FIG. **2-1**) may hold the first removable section **230** and the second removable section **232** together upon removal of each and limit loose pieces of trash or waste caused by the food container **200**.

[0027] FIG. **2-3** is a plan view of the food container **200** in a flat configuration. In the flat configuration, the food container **200** may be transported and stored more easily while allowing a food provider to assemble the food container **200** into the folded configuration illustrated and described in relation to FIG. **2-1** and FIG. **2-2**. In some embodiments, the first tearable perforation **224** and the second tearable perforation **226** are each substantially straight and/or substantially perpendicular to a longitudinal direction **228** relative to the hinge **206** in the flat configuration. In some embodiments, the body is substantially symmetrical across the hinge in the flat configuration. In some embodiments, the body is substantially symmetrical across the hinge in the flat configuration except for the complementary tab and slot of the closure mechanisms. In some embodiments, a tearable perforation has a curved portion, a corner, or another portion that is non-perpendicular to the longitudinal direction **228**. For example, the first tearable perforation **224** may be straight and perpendicular to the longitudinal direction **228** across the first surface **210** and oriented at a non-perpendicular angle to the longitudinal direction **228** across the first sidewalls **214**. In another example, the second tearable perforation **226** may be curved in a convex direction away from the hinge **206** relative to the longitudinal direction **228** across the second surface **212** and oriented at a perpendicular angle to the longitudinal direction **228** across the second sidewalls **216**.

[0028] FIG. **3-1** through **3-4** illustrate an embodiment of a food container **300** providing access to a food item **336** stored therein to eat the food item directly from the food container **300**. In some embodiments, the removable portion(s) of the food container **300** is removable at a tearable perforation. In some embodiments, at least a portion of the tearable perforation or set of tearable perforations includes a tear-resistant segment. For example, the tearable perforation or set of tearable perforations includes a foldable crease. In some embodiments, the removable portion(s) of the food container **300** remain at least partially connected to the food container by a foldable crease to limit the separate pieces of the food container and reduce litter and/or waste. A foldable crease is an indented or compressed portion of the body of the food container **300** that results in the body preferentially folding along the crease. "Preferentially folding" refers to the foldable crease requiring less force or torque to fold the body than other portions of the body. For example, the food container may be made or include a corrugated cardboard paper, and the foldable crease may lack the corrugation to allow preferential folding of the body along the foldable crease.

[0029] FIG. **3-1** is a perspective view of the food container **300** in a folded configuration. In some embodiments, the food container **300** includes a first side **302** and a second side **304** coupled by a hinge **306**. The hinge **306** allows rotation of the first side **302** relative to the second side **304** around the hinge **306** to open and close the food container **300**.

[0030] Additionally, the first side **302** and second side **304** include a first tearable perforation **324** and a second tearable perforation **326**, respectively, through the first sidewalls **314** and second sidewalls **316**, respectively. In some embodiments, a first foldable crease **338** is positioned across the first surface **310** and allows the first removable portion **330** to be folded back after the first tearable perforation **324** is disconnected. In some embodiments, a second foldable crease **340** is positioned across the second surface **312** and allows the second removable portion **332** to be folded back after the second tearable perforation **326** is disconnected.

[0031] In some embodiments, the food container **300** includes an end closure mechanism **334** at a forward edge of the food container **300** and opposite the hinge **306**. Upon removable and/or folding of the first removable portion **330** and/or the second removable portion **332**, the end closure mechanism **334** may fail to hold the first side **302** and second side **304** closed. In some embodiments, the food container **300** includes one or more side closure mechanisms **342** configured to couple the first sidewall **314** and the second sidewall **316** closer to the hinge **306** than the first tearable perforation **324** and the second tearable perforation **326**. Such a side closure mechanism **342** may allow the food container **300** to remain in a partially closed configuration while one or more removable portions **330**, **332** are removed or folded to allow access to the food item in the food container **300**.

[0032] FIG. **3-2** is a perspective view of the food container **300** of FIG. **3-1** in a vertical orientation (e.g., with the hinge **306** oriented downward) with a first removable portion **330** and second removable portion **332** separated and folded downward to leave the hinge portion **333** holding the food item **344**. In some embodiments, folding the first removable portion **330** and second removable portion **332** downward can allow a user to hold the food container **300** in the vertical orientation and consume the food item **344** therein without touching the food item and/or without dropping food waste from the food item **344**. In contrast to a conventional clamshell food container, some embodiments according to the present disclosure allow sandwiches and similar food items to be consumed directly from the food container **300**. In contrast to a conventional food wrapper, such as wax paper, parchment paper, butcher paper, etc., wrapped around a portion of the food item, some embodiments of food containers **300** according to the present disclosure have at least part of the interior volume **308** around or adjacent to the food item **344** to catch falling or loose food waste from the food item **344** during consumption. In both examples, conventional food containers or wrappers can result in food waste and/or container waste falling to the ground, the table, or the user during consumption of the food item.

[0033] FIG. **3-3** is a perspective view of the food container **300** of FIG. **3-1** in a vertical orientation with a first removable portion **330** and second removable portion **332** remaining coupled to one another and connected to the food

container **300** at the first foldable crease **338** and folded backward and downward toward the hinge **306**. In some embodiments, the second foldable crease **340** is a tearable perforation or a tearable crease that allow the second removable portion **332** to be disconnected along the second foldable crease **340** and/or perforation. In some embodiments, the end closure mechanism or a side closure mechanism retains the first removable portion **330** and second removable portion **332** coupled to one another.

[0034] In some embodiments, the coupled first removable portion **330** and second removable portion **332** provides a second interior volume in which a user can place additional food items, such as French fries with a hamburger, or place non-food items **346**, such as utensils or napkins, to keep a hand free for other tasks. For example, food containers are commonly used for food items that are consumed while the user is in transit, such as walking, to a destination. Some embodiments of food containers according to the present disclosure can allow a conventional clamshell experience for a food provider, while allowing the user to choose whether to use the clamshell configuration (such as described in relation to FIG. **2-1** and **2-2**) to transport the food item **344** to a destination or to open the food container **300** in one or more of the described vertical configurations (such as FIG. **3-1** through **3-3**) and consume the food item **344** during transit with less food waste.

[0035] FIG. **3-4** is a perspective view of the food container **300** of FIG. **3-1** with a first removable portion **330** and second removable portion **332** removed from the hinge portion **333**. The remaining hinge portion **333** of the food container **300** includes part of the first surface **310** and part of the second surface **312** proximate the hinge **306**. The remaining part of the first surface **310** and part of the second surface **312** in the hinge portion **333** provide a user surfaces to hold the food container **300** and consume the food item **344** while the side closure mechanism **342** holds the remaining portions of the first side **302** and second side **304** together.

[0036] FIG. **4-1** through FIG. **4-6** illustrate an embodiment of a food container **400** with a plurality of sets of perforations and a flat hinge portion. In some embodiments, the flat hinge portion **448** provides a flat support surface upon which the food container can stand in a freestanding vertical configuration. In some embodiments, the plurality of sets of perforations are positions at different longitudinal positions to allow a series of removable portions of the food container, which are independently removable as the user consumes more of the food item contained therein.

[0037] FIG. **4-1** is a plan view of a flat configuration of the food container **400**. The food container **400** includes a first side **402** and a second side **404**, each of which a first set and a second set of first tearable perforations **424-1**, **424-2** and second tearable perforations **426-1**, **426-2**. The first set of first tearable perforation **424-1** and second tearable perforation **426-1** is positioned distal to the flat hinge surface **448** and allow the removable of a first set of removable portions **430-1**, **432-1**. The second set of first tearable perforation **424-2** and second tearable perforation **426-2** is positioned proximate to the flat hinge surface **448** and allow the removable of a second set of removable portions **430-2**, **432-2** to leave only the hinge portion **433** of the food container **400**.

[0038] In some embodiments, the food container **400** includes foldable creases **450**, **452** proximate the flat hinge surface **448** to allow assembly of the food container **400** to a folded configuration. The food container **400** may include one or more sets of side closure mechanisms **442-1**, **442-2** to hold a remaining portion of the first side **402** and second side **404** of the food container **400** coupled to one another as removable portions **430-1**, **430-2**, **432-1**, **432-2** are removed. In some examples, the one or more sets of side closure mechanisms **442-1**, **442-2** maintain a connection of the first side and the second side of the removable portion after at least partial removal of the removable portion.

[0039] FIG. **4-2** is a perspective view of the food container **400** in a freestanding vertical orientation on the flat hinge surface **448**. The sets of side closure mechanisms **442-1**, **442-2** hold the first side **402** and second side **404** of the food container **400** coupled to one another. In some embodiments, the sets of side closure mechanisms **442-1**, **442-2** are positioned at different longitudinal positions on the food container **400** to allow each set of side closure mechanisms **442-1**, **442-2** to hold the food container **400** closed at different stages of disassembly.

[0040] FIG. **4-3** is a side view and FIG. **4-4** is a front view of the food container **400** in the freestanding vertical orientation of FIG. **4-2**. The second set of side closure mechanisms **442-2** are positioned in the second set of removable portions **430-2**, **432-2**. When the first set of removable portions **430-1**, **432-1** are removed (or folded) from the food container **400**, the second set of side closure mechanisms **442-2** hold the remaining portions of the first side **402** and the second side **404** together.

[0041] FIG. **4-5** is a perspective view of the food container **400** of FIG. **4-1** with the first set of removable portions removed, and the second set of side closure mechanisms **442-2** holding the remaining portions of the first side **402** and the second side **404** together. The interior volume **408** is accessible while the food container **400** is freestanding on the flat hinge surface **448**. FIG. **4-6** is a perspective view of the food container **400** of FIG. **4-5** with second set of removable portions removed.

[0042] FIG. **5-1** through **5-3** illustrate an embodiment of a food container **500** with a plurality of sealing elements **550**, **552** configured to limit liquid food waste from exiting the food container **500**. In some embodiments, the sealing elements are located at foldable creased or tearable perforations to limit or prevent liquid food waster, such as sauces, dressings, or soup from exiting the food container **500**. For example, a first sealing element **550** may be located at a hinge **506** of the food container **500**. In some embodiments, a second sealable element **552** is located on a sidewall **514**, **516** adjacent the first surface **510** and second surface **512**, respectively. The second sealing element **552** may function as or in addition to a side closure mechanism to hold the first sidewall **514** in contact with or near the second sidewall **516** when in a closed configuration.

[0043] In some embodiments, the second sealing element **552** is positioned with a first end proximate the hinge **506** and distal to the hinge **506** in a longitudinal direction **528**. The second sealing element **552** may stop in the longitudinal direction **528** before a tearable perforation **524**, **526** of the food container **500**. The second sealing element **552** may, therefore, be undisturbed when one or more of the tearable perforations **524**, **526** is disconnected and a portion of the food container **500** is removed.

[0044] FIG. **5-2** illustrates the food container **500** of FIG. **5-1** with a removable portion **530**, **532** of the food container

500 partially removed along a tearable perforation **540** of the second side **504** and folded backward along a foldable crease **538** of the first side **502** of the food container **500**. By connecting the first side **502** and the second side **504** with the second sealing elements **552**, the first side **502** and the second side **504** can remain connected. The first sealing element **550** at the hinge **506** and the second sealing elements **552** connecting the first side **502** to the second side **504** can create a bowl for food items, while the removable portions **530**, **532** may provide a carrying area for non-food items **546** such as utensils, napkins, trash, or other non-food items **546** to be keep separate from the food items.

[0045] FIG. **5-3** is a perspective view of the food container **500** of FIG. **5-2** with a food item **544** positioned therein. The salad food item **554** may have a dressing applied thereto, and the sealing elements **552** may contain the liquid dressing of the food item **554** so the user of the food container does not get dressing or other food waste on them through the hinge **506** or gaps between the first side **502** and second side **504** of the food container **500**. The removable portion **530**, **532** of the food container **500** is partially removed along a tearable perforation **540** of the second side **504** and folded backward along a foldable crease **538** of the first side **502** of the food container **500** to create the carrying area. The carrying area can hold non-food items **546**, such as the dressing packet after application and the utensils used to consume the food item **544**.

[0046] FIG. **6-1** illustrates an embodiment of a food container **600** with a food item **644** therein. As described herein, embodiments of a food container **600** according to the present disclosure allow for the consumption of a food item **644** without removal of the food item **644** from the food container **600**. The embodiment of a food container **600** is illustrated in FIG. **6-1** in a vertical orientation (e.g., with the hinge **606** oriented downward) with a first removable portion **630** and second removable portion **632** separated and folded downward to leave the hinge portion **633** holding the food item **644** in the interior volume **608**. In some embodiments, folding the first removable portion **630** and second removable portion **632** downward can allow a user to hold the food container **600** in the vertical orientation and consume the food item **644** therein without touching the food item and/or without dropping food waste from the food item **644**.

[0047] In some embodiments, a user may consume the food item **644** down to a level of the foldable and/or tearable crease that defines an upper portion of the interior volume **608**. FIG. **6-2** is a side view of the food container **600** holding a partially consumed food item **644** therein. In some embodiments, a food container **600** according to the present disclosure allows a user to apply an upward force **654** to the hinge **606** to deflect part of the food container **600** and/or part of the hinge portion **633** toward to the food item **644**. The upward force **654** may push the food item **644** upward relative to the hinge portion **633** and/or within the interior volume **608** to allow further consumption of the food item **644**.

[0048] FIG. **6-3** is a flat configuration of the food container **600** with a first removable portion **630** and a second removable portion **632** connected to a hinge portion **633** including the hinge **606**. In some embodiments, the hinge portion **633** includes tabs **618** and/or slots **620** on the sidewalls **614**, **616** and proximate to the hinge **606** to allow connection thereof. In some embodiments, the sidewalls **614**, **616** are not connected to the hinge surface **648**, but rather to one another by side closure mechanisms **642-1**, **642-2** that allow the sidewalls to remain coupled to one another while the hinge surface **648** moves relative thereto. For example, a force applied to the hinge **606**, as described in relation to FIG. **6-2** may urge the hinge surface **648** upward into the interior volume by folding along the hinge **606** itself.

[0049] In some embodiments, the side closure mechanisms **642-1**, **642-2** (and/or tabs **618** and/or slots **620** on the sidewalls **614**, **616** proximate to the hinge **606**) allow the hinge portion **633** to have a plurality of stable positions of the hinge **606** and/or hinge surface **648** relative to the sidewalls **614**, **616**. In some embodiments, the entire high surface **648** moves relative to the sidewalls **614**, **616**. In some embodiments, one or more hinge surface perforations **656** allow a portion of the hinge surfaces **648** to move relative to the sidewalls **614**, **616**.

[0050] Referring now to FIG. **6-4**, for example, in a conventional clamshell configuration of the hinge portion **633** in which the hinge **606** and/or at least a portion of the hinge surface **648** (such as the portion defined by the perforations **656**) is in an outward or downward configuration, the hinge **606** may form a first interior angle **658** (i.e., relative to the interior volume **608**) with the hinge surface(s) **648** of less than 180°. In such an example, the hinge **606** and/or at least a portion of the hinge surface **648** may be selectively moveable (e.g., through elastic deformation of the food container material) to an inward or upward configuration (shown in dashed line) in which the hinge **606** forms a second interior angle **660** (i.e., relative to the interior volume) with the hinge surface **648** of greater than 180°. In at least one example, in an outward or downward configuration, the hinge **606** may form a first interior angle **658** with the hinge surface(s) **648** of approximately 150°, and in an inward or upward configuration, the hinge **606** may form a second interior angle **660** with the hinge surface(s) **648** of approximately 210°. In doing so, the hinge surface **648** moves into the interior volume **608** of the food container **600** and reduces the interior volume **608** to urge and/or support the food item **644** in a higher state relative to the food container **600** allowing a user to consume more or all of the food item **644** without physically touching the food item **644** or dropping food waste.

[0051] In at least some embodiments of the present disclosure, a food container can provide a food provider with a familiar assembly and loading process, requiring little new training or changes to operations, while the consumer of the food item stored therein can have the option to transport the food item in the food container in a conventional manner or consume the food item in a more convenient and hygienic manner than is possible with conventional food containers.

INDUSTRIAL APPLICABLIITY

[0052] This disclosure generally relates to portable food containers. More particularly, the present disclosure relates the use of a food container that reduces both container waste and food waste being dropped or left behind. In some embodiments, a food container according to the present disclosure allows a provider of food to safely encapsulate a food item in the container and a consumer of the food to eat the food item without needing to remove the food item from the container. In some embodiments, at least a portion of the food container is removable to allow the consumer to access and eat the food item directly from the food container,

limiting the food waste that falls from the food container and/or limiting the additional plates, bowls, napkins, trays, or other ancillary items that may be dirtied and require cleaning or may be thrown in the trash after eating the food item.

[0053] Conventional food containers, such as a clamshell container, allow a provider of a food item to place the food item in the container and close a lid of the food container to enclose the food item. However, a consumer of the food item, such as a sandwich, must then lift the food item from the clamshell container, which results in food waste, such as sandwich ingredients, condiments, sauces, crumbs, etc. falling from the food item onto a table, the ground, or the consumer themselves. In some embodiments, a food container according to the present disclosure allows a provider to place the food item in the container in a familiar manner, while also allowing the consumer to eat the food item directly from the food container. Eating directly from the container may reduce container waste, allow the consumer to eat the food with only one hand (simplifying eating for the user), and reduce the food waste requiring subsequent cleaning.

[0054] In some embodiments, a food container includes a first side and a second side coupled by a hinge. The hinge allows rotation of the first side relative to the second side around the hinge to open and close the food container. Additionally, the first side and second side include a first tearable perforation and a second tearable perforation, respectively. The first tearable perforation and second tearable perforation are longitudinally aligned (e.g., in a longitudinal direction away from the hinge) to form a substantially continuous tearable perforation around the food container. For example, the longitudinally distal portions of the first side and the second side of the food container away from the hinge may be removed at the first tearable perforation and the second tearable perforation to allow that user to access the food item stored therein. In other examples, the first tearable perforation and the second tearable perforation may be longitudinally misaligned to allow one of the first side **202** or the second side to be longitudinally longer than the other when the removable portion of the food container is removed at the first tearable perforation and the second tearable perforation.

[0055] In some embodiments, the first tearable perforation is positioned in the first surface and first sidewalls of the first side, and the second tearable perforation is positioned in the second surface and second sidewalls of the second side. The first removable section and the second removable section are independently removable at the first tearable perforation and the second tearable perforation, respectively, while a hinge portion of the body of the food container remains connected via the hinge. In some embodiments, the food container includes an end closure mechanism (such as interlocking tabs, slots, or other features) that retains the food container in a closed configuration and retains the first removable section and the second removable section relative to one another. Such end closure mechanism may hold the first removable section and the second removable section together upon removal of each and limit loose pieces of trash or waste caused by the food container.

[0056] In the flat configuration, the food container may be transported and stored more easily while allowing a food provider to assemble the food container into the folded configuration. In some embodiments, the first tearable perforation and the second tearable perforation are each substantially straight and/or substantially perpendicular to a longitudinal direction relative to the hinge in the flat configuration. In some embodiments, a tearable perforation has a curved portion, a corner, or another portion that is non-perpendicular to the longitudinal direction. For example, the first tearable perforation may be straight and perpendicular to the longitudinal direction across the first surface and oriented at a non-perpendicular angle to the longitudinal direction across the first sidewalls. In another example, the second tearable perforation may be curved in a convex direction away from the hinge relative to the longitudinal direction across the second surface and oriented at a perpendicular angle to the longitudinal direction across the second sidewalls.

[0057] In some embodiments, the removable portion(s) of the food container is removable at a tearable perforation. In some embodiments, the removable portion(s) of the food container remain at least partially connected to the food container by a foldable crease to limit the separate pieces of the food container and reduce litter and/or waste.

[0058] In some embodiments, the food container includes a first side and a second side coupled by a hinge. The hinge allows rotation of the first side relative to the second side around the hinge to open and close the food container. The first side and second side include a first tearable perforation and a second tearable perforation, respectively, through the first sidewalls and second sidewalls, respectively. In some embodiments, a first foldable crease is positioned across the first surface and allows the first removable portion to be folded back after the first tearable perforation is disconnected. In some embodiments, a second foldable crease is positioned across the second surface and allows the second removable portion to be folded back after the second tearable perforation is disconnected.

[0059] In some embodiments, the food container includes an end closure mechanism at a forward edge of the food container and opposite the hinge. Upon removable and/or folding of the first removable portion and/or the second removable portion, the end closure mechanism may fail to hold the first side and second side closed. In some embodiments, the food container includes one or more side closure mechanisms configured to couple the first sidewall and the second sidewall closer to the hinge than the first tearable perforation and the second tearable perforation. Such a side closure mechanism may allow the food container to remain in a partially closed configuration while one or more removable portions are removed or folded to allow access to the food item in the food container.

[0060] In some embodiments, folding the first removable portion and second removable portion downward can allow a user to hold the food container in the vertical orientation and consume the food item therein without touching the food item and/or without dropping food waste from the food item. In contrast to a conventional clamshell food container, some embodiments according to the present disclosure allow sandwiches and similar food items to be consumed directly from the food container. In contrast to a conventional food wrapper, such as wax paper, parchment paper, butcher paper, etc., wrapped around a portion of the food item, some embodiments of food containers according to the present disclosure have at least part of the interior volume around or adjacent to the food item to catch falling or loose food waste from the food item during consumption. In both examples,

conventional food containers or wrappers can result in food waste and/or container waste falling to the ground, the table, or the user during consumption of the food item.

[0061] In some embodiments, the second foldable crease is a tearable perforation or a tearable crease that allow the second removable portion to be disconnected along the second foldable crease and/or perforation. In some embodiments, the end closure mechanism or a side closure mechanism retains the first removable portion and second removable portion coupled to one another.

[0062] In some embodiments, the coupled first removable portion and second removable portion provides a second interior volume in which a user can place additional food items, such as French fries with a hamburger, or place non-food items, such as utensils or napkins, to keep a hand free for other tasks. For example, food containers are commonly used for food items that are consumed while the user is in transit, such as walking, to a destination. Some embodiments of food containers according to the present disclosure can allow a conventional clamshell experience for a food provider, while allowing the user to choose whether to use the clamshell configuration to transport the food item **344** to a destination or to open the food container in one or more of the described vertical configurations and consume the food item during transit with less food waste.

[0063] In some embodiments, a remaining hinge portion of the food container includes part of the first surface and part of the second surface proximate the hinge. The remaining part of the first surface and part of the second surface in the hinge portion provide a user surfaces to hold the food container and consume the food item while a side closure mechanism holds the remaining portions of the first side and second side together.

[0064] In some embodiments, the flat hinge portion provides a flat support surface upon which the food container can stand in a freestanding vertical configuration. In some embodiments, the plurality of sets of perforations are positions at different longitudinal positions to allow a series of removable portions of the food container, which are independently removable as the user consumes more of the food item contained therein.

[0065] The food container includes a first side and a second side, each of which a first set and a second set of first tearable perforations and second tearable perforations. The first set of first tearable perforation and second tearable perforation is positioned distal to the flat hinge surface and allow the removable of a first set of removable portions. The second set of first tearable perforation and second tearable perforation is positioned proximate to the flat hinge surface and allow the removable of a second set of removable portions to leave only the hinge portion of the food container.

[0066] In some embodiments, the food container includes foldable creases proximate the flat hinge surface to allow assembly of the food container to a folded configuration. The food container may include one or more sets of side closure mechanisms to hold a remaining portion of the first side and second side of the food container coupled to one another as removable portions are removed.

[0067] The sets of side closure mechanisms hold the first side and second side of the food container coupled to one another. In some embodiments, the sets of side closure mechanisms are positioned at different longitudinal positions on the food container to allow each set of side closure mechanisms to hold the food container **400** closed at different stages of disassembly.

[0068] The second set of side closure mechanisms are positioned in the second set of removable portions. When the first set of removable portions are removed (or folded) from the food container, the second set of side closure mechanisms hold the remaining portions of the first side and the second side together. The interior volume is accessible while the food container is freestanding on the flat hinge surface.

[0069] In some embodiments, sealing elements are located at foldable creased or tearable perforations to limit or prevent liquid food waster, such as sauces, dressings, or soup from exiting the food container. For example, a first sealing element may be located at a hinge of the food container. In some embodiments, a second sealable element is located on a sidewall adjacent the first surface and second surface, respectively. The second sealing element may function as or in addition to a side closure mechanism to hold the first sidewall in contact with or near the second sidewall when in a closed configuration.

[0070] In some embodiments, the second sealing element is positioned with a first end proximate the hinge and distal to the hinge in a longitudinal direction. The second sealing element may stop in the longitudinal direction before a tearable perforation of the food container. The second sealing element may, therefore, be undisturbed when one or more of the tearable perforations is disconnected and a portion of the food container is removed.

[0071] By connecting the first side and the second side with the second sealing elements, the first side and the second side can remain connected. The first sealing element at the hinge and the second sealing elements connecting the first side to the second side can create a bowl for food items, while the removable portions may provide a carrying area for non-food items such as utensils, napkins, trash, or other non-food items to be keep separate from the food items.

[0072] For example, a salad food item may have a dressing applied thereto, and the sealing elements may contain the liquid dressing of the food item, so the user of the food container does not get dressing or other food waste on them through the hinge or gaps between the first side and second side of the food container. The removable portion of the food container is partially removed along a tearable perforation of the second side and folded backward along a foldable crease of the first side of the food container to create the carrying area. The carrying area can hold non-food items, such as the dressing packet after application and the utensils used to consume the food item.

[0073] As described herein, embodiments of a food container according to the present disclosure allow for the consumption of a food item without removal of the food item from the food container. In some embodiments, a food container is in a vertical orientation (e.g., with the hinge oriented downward) with a first removable portion and second removable portion separated and folded downward to leave the hinge portion holding the food item in the interior volume. In some embodiments, folding the first removable portion and second removable portion downward can allow a user to hold the food container in the vertical orientation and consume the food item therein without touching the food item and/or without dropping food waste from the food item.

[0074] In some embodiments, a user may consume the food item down to a level of the foldable and/or tearable crease that defines an upper portion of the interior volume. In some embodiments, a food container according to the present disclosure allows a user to apply an upward force to the hinge to deflect part of the food container and/or part of the hinge portion toward to the food item. The upward force may push the food item upward relative to the hinge portion and/or within the interior volume to allow further consumption of the food item.

[0075] In some embodiments, the hinge portion includes tabs and/or slots on the sidewalls and proximate to the hinge to allow connection thereof. In some embodiments, the sidewalls are not connected to the hinge surface, but rather to one another by side closure mechanisms, that allow the sidewalls to remain coupled to one another while the hinge surface moves relative thereto. For example, a force applied to the hinge, as described herein, may urge the hinge surface upward into the interior volume by folding along the hinge itself.

[0076] In some embodiments, the side closure mechanisms allows the hinge portion to have a plurality of stable positions of the hinge and/or hinge surface relative to the sidewalls. For example, in a conventional clamshell configuration of the hinge portion in which the hinge and/or hinge surface is in an outward or downward configuration, the hinge may form an interior angle (i.e., relative to the interior volume) with the hinge surface(s) of less than 180°. In such an example, the hinge and/or hinge surface may be selectively moveable (e.g., through elastic deformation of the food container material) to an inward or upward configuration in which the hinge forms an interior angle (i.e., relative to the interior volume) with the hinge surface of greater than 180°. In at least one example, in an outward or downward configuration, the hinge may form an interior angle with the hinge surface(s) of approximately 150°, and in an inward or upward configuration, the hinge may form an interior angle with the hinge surface(s) of approximately 210°. In doing so, the hinge surface moves into the interior volume of the food container and reduces the interior volume to urge and/or support the food item in a higher state relative to the food container allowing a user to consume more or all of the food item without physically touching the food item or dropping food waste.

[0077] In at least some embodiments of the present disclosure, a food container can provide a food provider with a familiar assembly and loading process, requiring little new training or changes to operations, while the consumer of the food item stored therein can have the option to transport the food item in the food container in a conventional manner or consume the food item in a more convenient and hygienic manner than is possible with conventional food containers.

[0078] The articles "a," "an," and "the" are intended to mean that there are one or more of the elements in the preceding descriptions. The terms "comprising," "including," and "having" are intended to be inclusive and mean that there may be additional elements other than the listed elements. Additionally, it should be understood that references to "one embodiment" or "an embodiment" of the present disclosure are not intended to be interpreted as excluding the existence of additional embodiments that also incorporate the recited features. For example, any element described in relation to an embodiment herein may be combinable with any element of any other embodiment described herein. Numbers, percentages, ratios, or other values stated herein are intended to include that value, and also other values that are "about" or "approximately" the stated value, as would be appreciated by one of ordinary skill in the art encompassed by embodiments of the present disclosure. A stated value should therefore be interpreted broadly enough to encompass values that are at least close enough to the stated value to perform a desired function or achieve a desired result. The stated values include at least the variation to be expected in a suitable manufacturing or production process, and may include values that are within 5%, within 1%, within 0.1%, or within 0.01% of a stated value.

[0079] A person having ordinary skill in the art should realize in view of the present disclosure that equivalent constructions do not depart from the spirit and scope of the present disclosure, and that various changes, substitutions, and alterations may be made to embodiments disclosed herein without departing from the spirit and scope of the present disclosure. Equivalent constructions, including functional "means-plus-function" clauses are intended to cover the structures described herein as performing the recited function, including both structural equivalents that operate in the same manner, and equivalent structures that provide the same function. It is the express intention of the applicant not to invoke means-plus-function or other functional claiming for any claim except for those in which the words 'means for' appear together with an associated function. Each addition, deletion, and modification to the embodiments that falls within the meaning and scope of the claims is to be embraced by the claims.

[0080] It should be understood that any directions or reference frames in the preceding description are merely relative directions or movements. For example, any references to "front" and "back" or "top" and "bottom" or "left" and "right" are merely descriptive of the relative position or movement of the related elements.

[0081] The present disclosure may be embodied in other specific forms without departing from its spirit or characteristics. The described embodiments are to be considered as illustrative and not restrictive. The scope of the disclosure is, therefore, indicated by the appended claims rather than by the foregoing description. Changes that come within the meaning and range of equivalency of the claims are to be embraced within their scope.

What is claimed is:

1. A food container comprising:

a body, the body having a flat configuration and a folded configuration, wherein the body includes:

a hinge located in a hinge portion of the body and configured to allow the body to preferentially fold along the hinge,

a first set of side closure mechanisms in the hinge portion configured to connect with one another when the body is in the folded configuration; and

a set of tearable perforations wherein at least one tearable perforation of the set of tearable perforations allows a removable portion of the body to be at least partially removed from the hinge portion.

2. The food container of claim **1**, wherein a first side of the body in the flat configuration and a second side of the body in the flat configuration are symmetrical across the hinge.

3. The food container of claim **1**, wherein the hinge includes two foldable indentations.

4. The food container of claim **1**, wherein the removable portion of the body includes a second set of closure mechanisms.

5. The food container of claim **1**, wherein the first set of closure mechanisms includes mechanically interlocking mechanisms.

6. The food container of claim **5**, wherein the mechanically interlocking mechanisms include a tab on a first side of the body and a complementary slot on a second side of the body opposite the first side of the body across the hinge.

7. The food container of claim **1**, wherein the first set of closure mechanisms includes an adhesive.

8. The food container of claim **1**, wherein the set of tearable perforations includes a tear-resistant segment configured to retain the removable portion relative to the hinge portion.

9. The food container of claim **8**, wherein the tear-resistant segment includes a foldable crease.

10. The food container of claim **1**, wherein the body includes paper.

11. A food container comprising:

a body, the body having a flat configuration and a folded configuration, wherein the body includes:

a hinge located in a hinge portion of the body and configured to allow the body to preferentially fold along the hinge,

a first set of closure mechanisms in the hinge portion configured to connect with one another when the body is in the folded configuration;

a second set of closure mechanisms in a removable portion, wherein a first side of the body and a second side of the body are opposite one another across the hinge; and

a first set of tearable perforations wherein at least one tearable perforation of the first set of tearable perforations allow the removable portion of the body to be at least partially removed from the hinge portion.

12. The food container of claim **11**, wherein the first set of closure mechanisms and the second set of closure mechanisms are both on a sidewall of the food container.

13. The food container of claim **11**, wherein the first set of closure mechanisms includes mechanically interlocking mechanisms.

14. The food container of claim **11**, wherein the second set of closure mechanisms includes mechanically interlocking mechanisms.

15. The food container of claim **11**, wherein the removable portion is a first removable portion and further comprising a second set of tearable perforations wherein the tearable perforations allow a second removable portion of the body to be at least partially removed from the hinge portion.

16. The food container of claim **15**, wherein the second set of closure mechanisms is in the first removable portion.

17. The food container of claim **15**, further comprising a third set of closure mechanisms in the second removable portion.

18. The food container of claim **15**, wherein the second set of closure mechanisms maintains a connection of the first side and the second side of the second removable portion after at least partial removal of the second removable portion.

19. A food container comprising:

a body, the body having a flat configuration and a folded configuration, wherein the body includes:

a hinge located in a hinge portion of the body and configured to allow the body to preferentially fold along the hinge,

a first set of side closure mechanisms in the hinge portion configured to connect with one another when the body is in the folded configuration;

a set of tearable perforations wherein at least one tearable perforation of the set of tearable perforations allow a removable portion of the body to be at least partially removed from the hinge portion; and

a sealing element located on at least one sidewall of the body.

20. The food container of claim **19**, further comprising a second sealing element on the hinge.

* * * * *